609

Atlas Copco

Reg. code
ASL GA11/22-10
1990-06

To be filed in the ASL collection -- binder 22 -- under tab 29.
Replaces Printed Matter No. 2930 6032 01 (1990-01)

Parts list for stationary compressors
Onderdelenlijst voor stationaire kompressoren
Reservdelsförteckning för stationära kompressorer
Teilliste für stationäre Kompressoren
Liste de pièces pour compresseurs stationnaires
Lista de las partes para compresores estacionarios
Listino parti di ricambio per compressori stazionari

GA11, -15, -18, -22 Pack

From following serial number onwards:
Geldig vanaf volgend serienummer:
Fr.o.m. tillverkningsnummer:
Gültig ab Seriennummer:
Valable à partir du numéro de série suivant:
A partir del siguiente número de serie:
Dai seguenti numeri di serie in avanti:

ARP-774 290

ATLAS COPCO AIRPOWER n.v. - B-2610 WILRIJK - BELGIUM
Printed Matter No. 2930 6032 02

Page	Contents
Blz.	Inhoud
Sida	Innehåll
Seite	Inhaltsverzeichnis
Pag.	Table des matières
Pág.	Indice
Pag.	Indice

4 Air inlet, compressor element, compressor mounting and frame
Luchtinlaat, kompressorelement, kompressoropstelling en frame
Luftintag, kompressorelement, kompressormontering och ram
Lufteinlaß, Kompressorelement, Kompressormontage und Rahmen
Admission d'air, élément compresseur, superstructure du compresseur et châssis
Entrada de aire, elemento compresor, piezas de montaje del compresor y bastidor
Entrata aria, elemento compressore, installazione compressore e telaio

5 Unloading valve
Ontlastventiel
Avlastningsventil
Entlastungsventil
Soupape de décharge
Válvula de descarga
Valvola di messa a vuoto

7 Drive arrangement, cooler and fan
Aandrijfuitvoering, koeler en ventilator
Arrangemang, kylare och fläkt
Antriebsanordnung, Kühler und Lüfter
Entraînement, refroidisseur et ventilateur
Accionamiento, refrigerador y ventilador
Azionamento, refrigeratori e ventilatore

10 Oil stop valve
Olieafsluitklep
Avstängningsventil, olja
Ölabsperrventil
Soupape d'arrêt d'huile
Válvula de cierre de aceite
Valvola di arresto dell'olio

11 Minimum pressure valve
Minimumdrukklep
Minimitryckventil
Mindestdruckventil
Soupape à minimum de pression
Válvula de presión mínima
Valvola di minima pressione

13 Air receiver and oil system (welded receiver)
Luchtketel en oliesysteem (gelaste ketel)
Luftbehållare och oljesystem (svetsad behållare)
Luftbehälter und Ölkreislauf (geschweißter Behälter)
Réservoir d'air et système d'huile (réservoir soudé)
Depósito de aire y sistema de aceite (depósito soldado)
Serbatoio dell'aria e sistema dell'olio (serbatoio saldato)

15 Air receiver and oil system (cast receiver)
Luchtketel en oliesysteem (gegoten ketel)
Luftbehållare och oljesystem (gjuten behållare) Luftbehälter und Ölkreislauf (gegossener Behälter)
Réservoir d'air et système d'huile (réservoir en fonte)
Depósito de aire y sistema de aceite (depósito fundido)
Serbatoio dell'aria e sistema dell'olio (serbatoio di fusione)

16 Air, regulating and drain connections (welded receiver)
Lucht-, regel- en aftapaansluitingen (gelaste ketel)
Luft-, reglerings- och avtappningsanslutningar (svetsad behållare)
Luft-, Regel- und Ablaßanschlüsse (geschweißter Behälter)
Connexions d'air, de régulation et de vidange (réservoir soudé)
Conexiones de aire, de regulación y de drenaje (depósito soldado)
Collegamenti per aria, regolazione - scarico (serbatoio saldato)

19 Air-, regulating- and drain connections (cast receiver)
Lucht-, regel- en aftapaansluitingen (gegoten ketel)
Luft-, reglerings- och avtappningsanslutningar (gjuten behållare)
Luft-, Regel- und Ablaßanschlüsse (gegossener Behälter)
Connexions d'air, de régulation et de vidange (réservoir en fonte)
Conexiones de aire, de regulación y de drenaje (depósito fundido)
Collegamenti per aria, regolazione - scarico (serbatoio di fusione)

21 Cubicle with star-delta starter 50 Hz
Kast met ster-driehoek starter 50 Hz
Skåp med stjärn-triangelstartare 50 Hz
Kasten mit Stern-Dreieck Anlasser 50 Hz
Armoire avec démarreur étoile-triangle 50 Hz
Armario con arrancador estrella-triángulo 50 Hz
Armadio elettrico con apparecchiatura per l'avviamento stella/triangolo 50 Hz

23 Cubicle with star-delta starter 60 Hz
Kast met ster-driehoek starter 60 Hz
Skåp med stjärn-triangelstartare 60 Hz
Kasten mit Stern-Dreieck Anlasser 60 Hz
Armoire avec démarreur étoile-triangle 60 Hz
Armario con arrancador estrella-triángulo 60 Hz
Armadio elettrico con apparecchiatura per l'avviamento stella/triangolo 60 Hz

25 Cubicle with D.O.L. starter
Kast met D.O.L. starter
Skåp med D.O.L. startutrustning
Kasten mit D.O.L. Anlasser
Armoire avec démarreur D.O.L.
Armario con arrancador D.O.L.
Armadio elettrico con apparecchiatura per l'avviamento diretto dalla linea

27 Contents "Service kits"
Inhoud "Service kits"
Innehåll "Service kits"
Inhalt "Service kits"
Table des matières "Service kits"
Indice "Service kits"
Indice "Kit per la manutenzione"

28 Bodywork
Karrosserie
Karosseri
Karosserie
Capotage
Carrocería
Cappottatura

"Service kits" reference to pages
"Service kits" verwijzing naar bladzijden
"Service kits" refererar till sidor
"Service kits" mit Verweis zu den Seiten
"Service kits" avec pages de référence
"Service kits" con referencia a páginas
"Kit di manutenzione", vedi pagine

4,13,15,27	2,000 hr Filter kit (Kit 2901 0000 00) Filterkit, 2.000 uren (Kit 2901 0000 00) Filterkit, 2.000 timmar (Kit 2901 0000 00) Filtersatz, 2.000 Stunden (Kit 2901 0000 00) Kit pour filtres, 2.000 heures (Kit 2901 0000 00) Equipo de filtros, 2.000 horas (Kit 2901 0000 00) Kit filtri per 2.000 ore (Kit 2901 0000 00)
27	Oil kit (Kit 2901 0001 00) Oliekit (Kit 2901 0001 00) Oljekit (Kit 2901 0001 00) Ölsatz (Kit 2901 0001 00) Kit d'huile (Kit 2901 0001 00) Equipo de aceite (Kit 2901 0001 00) Kit, olio (Kit 2901 0001 00)
13,15,17, 19,27	Oil separator (Kit 2901 0003 00) Olieafscheider (Kit 2901 0003 00) Oljeavskiljare (Kit 2901 0003 00) Ölabscheider (Kit 2901 0003 00) Séparateur d'huile (Kit 2901 0003 00) Separador aceite (Kit 2901 0003 00) Separatore olio (Kit 2901 0003 00)
11,13,15, 17,19,27	Minimum pressure valve (Kit 2901 0005 00) Minimumdrukklep (Kit 2901 0005 00) Minimitryckventil (Kit 2901 0005 00) Mindestdruckventil (Kit 2901 0005 00) Soupape à minimum de pression (Kit 2901 0005 00) Válvula de presión mínima (Kit 2901 0005 00) Valvola di minima pressione (Kit 2901 0005 00)
17,19,27	Moisture trap (Kit 2901 0007 00) Waterafscheider (Kit 2901 0007 00) Vattenavskiljare (Kit 2901 0007 00) Wasserabscheider (Kit 2901 0007 00) Séparateur d'eau (Kit 2901 0007 00) Colector de agua (Kit 2901 0007 00) Separatore di condensa (Kit 2901 0007 00)
27	6,000 hr kit GA11-15 (Kit 2901 0008 00) 6.000 hr kit GA11-15 (Kit 2901 0008 00) 6.000 hr kit GA11-15 (Kit 2901 0008 00) 6.000 Std. kit GA11-15 (Kit 2901 0008 00) 6.000 hr kit GA11-15 (Kit 2901 0008 00) 6.000 hr kit GA11-15 (Kit 2901 0008 00) 6.000 hr kit GA11-15 (Kit 2901 0008 00)
27	6,000 hr kit GA18-22 (Kit 2901 0010 00) 6.000 hr kit GA18-22 (Kit 2901 0010 00) 6.000 hr kit GA18-22 (Kit 2901 0010 00) 6.000 Std. kit GA18-22 (Kit 2901 0010 00) 6.000 hr kit GA18-22 (Kit 2901 0010 00) 6.000 hr kit GA18-22 (Kit 2901 0010 00) 6.000 hr kit GA18-22 (Kit 2901 0010 00)
4,5,27	Unloading valve (Kit 2901 0012 00) Ontlastventiel (Kit 2901 0012 00) Avlastningsventil (Kit 2901 0012 00) Entlastungsventil (Kit 2901 0012 00) Soupape de décharge (Kit 2901 0012 00) Válvula de descarga (Kit 2901 0012 00) Valvola di messa a vuoto (Kit 2901 0012 00)
9,27	Tension pulley (Kit 2901 0013 00) Spanrol (Kit 2901 0013 00) Spännrulle (Kit 2901 0013 00) Spannrolle (Kit 2901 0013 00) Poulie, tendeur (Kit 2901 0013 00) Polea tensora (Kit 2901 0013 00) Puleggia tendi-cinghia (Kit 2901 0013 00)
17,19,27	Check valve (Kit 2901 0014 00) Terugslagklep (Kit 2901 0014 00) Backventil (Kit 2901 0014 00) Rückschlagventil (Kit 2901 0014 00) Clapet de retenue (Kit 2901 0014 00) Válv. de retención (Kit 2901 0014 00) Valvola di non-ritorno (Kit 2901 0014 00
27	Vent valve (Kit 2901 0015 00) Afblaasklep (Kit 2901 0015 00) Luftningsventil (Kit 2901 0015 00) Entlüftungsventil (Kit 2901 0015 00) Soupape d'évent (Kit 2901 0015 00) Válv. de ventilación (Kit 2901 0015 00) Valvola di sfiato (Kit 2901 0015 00)
10,13,15, 27	Oil stop valve (Kit 2901 0016 00) Olieafsluitklep (Kit 2901 0016 00) Avstängningsventil, olja (Kit 2901 0016 00) Ölabsperrventil (Kit 2901 0016 00) Soupape d'arrêt d'huile (Kit 2901 0016 00) Válvula de cierre de aceite (Kit 2901 0016 00) Valvola di arresto dell'olio (Kit 2901 0016 00)
27	12,000 hr kit GA11-15 (Kit 2901 0017 00) 12.000 hr kit GA11-15 (Kit 2901 0017 00) 12.000 hr kit GA11-15 (Kit 2901 0017 00) 12.000 Std. kit GA11-15 (Kit 2901 0017 00) 12.000 hr kit GA11-15 (Kit 2901 0017 00) 12.000 hr kit GA11-15 (Kit 2901 0017 00) 12.000 hr kit GA11-15 (Kit 2901 0017 00)
27	12,000 hr kit GA18-22 (Kit 2901 0019 00) 12.000 hr kit GA18-22 (Kit 2901 0019 00) 12.000 hr kit GA18-22 (Kit 2901 0019 00) 12.000 Std. kit GA18-22 (Kit 2901 0019 00) 12.000 hr kit GA18-22 (Kit 2901 0019 00) 12.000 hr kit GA18-22 (Kit 2901 0019 00) 12.000 hr kit GA18-22 (Kit 2901 0019 00)
27	V-belt set GA11-15 (Kit 2901 0022 00) V-riemset GA11-15 (Kit 2901 0022 00) Sats kilremmar GA11-15 (Kit 2901 0022 00) Keilriemensatz GA11-15 (Kit 2901 0022 00) Jeu de courr. trap. GA11-15 (Kit 2901 0022 00) Juego de corr. trap. GA11-15 (Kit 2901 0022 00) Serie di cinghie trapezoidali GA11-15 (Kit 2901 0022 00)
27	V-belt set GA18-22 (Kit 2901 0023 00) V-riemset GA18-22 (Kit 2901 0023 00) Sats kilremmar GA18-22 (Kit 2901 0023 00) Keilriemensatz GA18-22 (Kit 2901 0023 00) Jeu de courr. trap. GA18-22 (Kit 2901 0023 00) Juego de corr. trap. GA18-22 (Kit 2901 0023 00) Serie di cinghie trapezoidali GA18-22 (Kit 2901 0023 00)

Air inlet, compressor element, compressor mounting and frame
Luchtinlaat, kompressorelement, kompressoropstelling en frame
Luftintag, kompressorelement, kompressormontering och ram
Lufteinlaß, Kompressorelement, Kompressormontage und Rahmen
Admission d'air, élément compresseur, superstructure du compresseur et châssis
Entrada de aire, elemento compresor, piezas de montaje del compresor y bastidor
Entrata aria, elemento compressore, installazione compressore e telaio

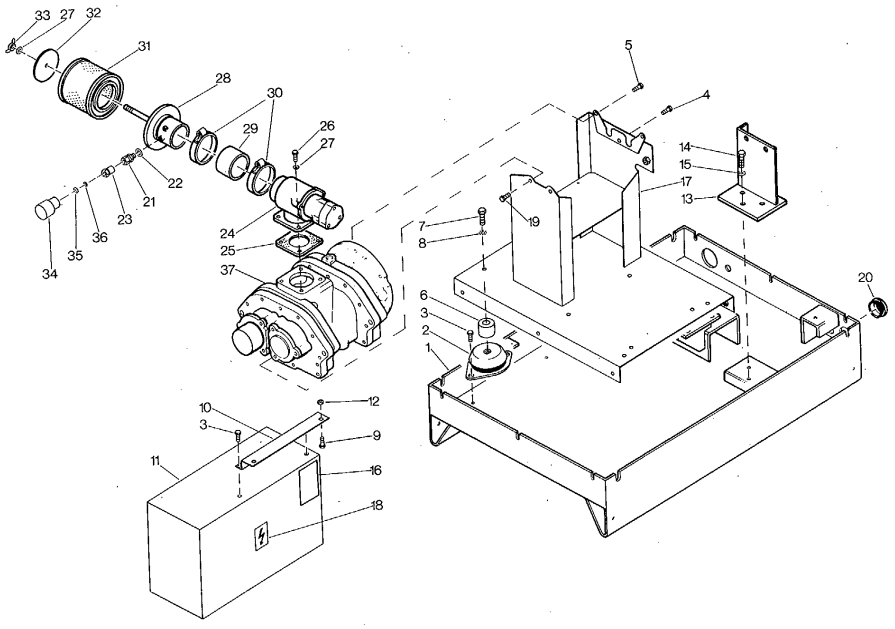

Ref.	A	B	C	D	Designation
1	1202 6180 00			1	Frame
2	1619 3885 01			4	Rubber pad
3	1619 2766 00			10	Bolt
4	0211 1960 47		1)	2	Cap screw
5	0211 1960 46		1)	2	Cap screw
6	1612 3835 00			4	Spacer
7	0147 1367 03			4	Bolt
8	0333 3232 00			4	Lock washer
9	1079 1472 05			2	Bolt
10	1202 6181 00			1	Support
11	- - -			1	Cubicle
12	1079 0298 01			2	Nut
13	1202 6182 00			1	Support
14	1619 5337 01			3	Bolt
15	0303 1274 01			3	Washer
16	1079 9901 09			1	Decal
17	1202 6206 00			1	Compr. support
18	1088 1001 04			1	Warning mark
19	0211 1960 48		1)	2	Cap screw
20	1503 1633 00			1	Plug
21	0581 0014 01			1	Pipe coupling
22	0653 1046 00			1	Gasket
23	0580 0500 28			1	Nozzle
24	- - -			1	Unl. valve
25	1202 6999 00		2	1	Gasket
26	0147 1325 03			4	Bolt
27	0301 2335 00			5	Washer
28	1202 6220 00			1	Adaptor
29	1612 3868 00			1	Hose
30	0347 4373 00			2	Clamp ring
31	1619 1269 00		1	1	Element
32	1612 3838 00			1	Disc
33	0296 1110 02			1	Wing nut
34	1619 3790 01			1	Warning device
35	0657 5742 00			1	Gasket
36	1619 5819 00		1	1	Felt disc
37	2989 0076 00			1	Service stage

1 Kit 2901 0000 00
2 Kit 2901 0012 00
1) Apply industrial adhesive / Gebruik industrieel kleefmiddel / Använd industriell klister / Industrielles Klebemittel verwenden/ Appliquer un adhésif industriel / Aplicar adhesivo industrial / Utilizzare adesivo industriale

7_082_5_0_0

Unloading valve
Ontlastventiel
Avlastningsventil
Entlastungsventil
Soupape de décharge
Válvula de descarga
Valvola di messa a vuoto

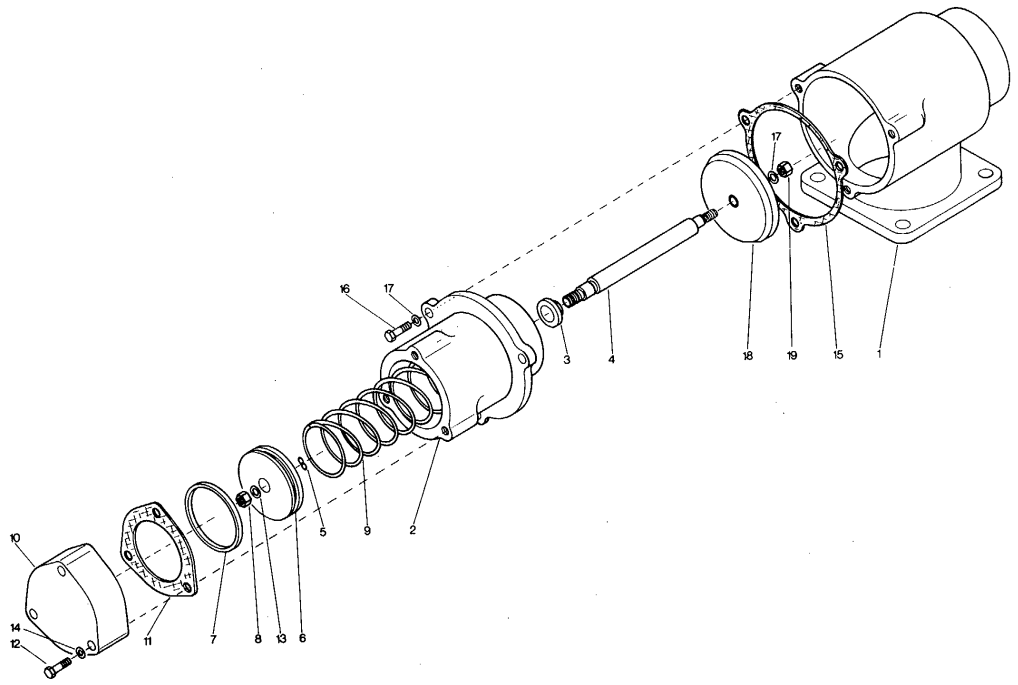

Ref.	A	B	C	D	Designation
-	9820 1462 80			1	Unl. valve
1	* * *	•		1	Housing
-	1612 2400 80	•		1	Cylinder
2	1612 2400 00	••		1	Cylinder
3	0665 9110 00	••	1	1	Seal ring
4	1612 2401 00	••		1	Piston rod
5	0663 7114 00	••	1	1	O-ring
6	1612 2402 00	••		1	Valve
7	1619 5471 00	••	1	1	Piston ring
8	0291 1110 00	••	1	1	Lock nut
9	1202 9891 00	••	1	1	Spring
10	1612 2404 00	••		1	Cover
11	1202 6997 00	••	1	1	Gasket

Ref.	A	B	C	D	Designation
12	0147 1252 03	••		3	Bolt
13	0301 2335 00	••		1	Washer
14	0301 2321 00	••		3	Washer
15	1202 6998 00	•	1	1	Gasket
16	0147 1247 03	•		3	Bolt
17	0301 2321 00	•		4	Washer
18	1612 2407 00	•		1	Valve
19	0291 1108 00	•	1	1	Lock nut

1 Kit 2901 0012 00

22_039_3_2_7

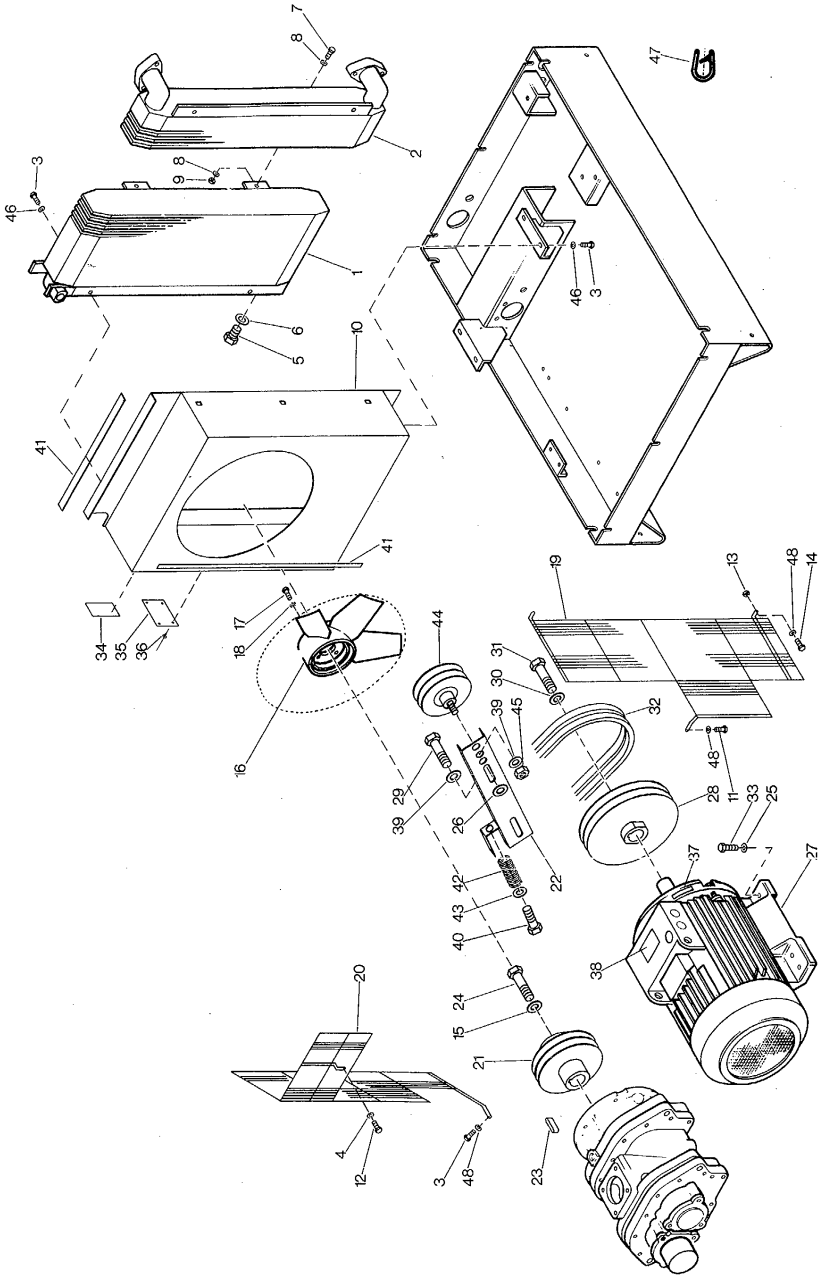
7
8
2
3
46
8
9
1
6
5
10
41
41
34
35
36
17
18
16
44
31
30
39
45
29
39
26
42
43
40
22
20
24
15
21
4
12
3
48
23
19
13
48
14
32
48
11
28
33
25
37
27
38
47
46
3

Drive arrangement, cooler and fan
Aandrijfuitvoering, koeler en ventilator
Arrangemang, kylare och fläkt
Antriebsanordnung, Kühler und Lüfter
Entraînement, refroidisseur et ventilateur
Accionamiento, refrigerador y ventilador
Azionamento, refrigeratori e ventilatore

Compressor Kompressor Kompressor Kompressor Compresseur Compresor Compressore	Motor Motor Motor Motor Moteur Motor Motore Ref. 27	Designation Beschrijving Benämning Bezeichnung Désignation Designación Descrizione	Pulley Riemschijf Remskiva Riemenscheibe Poulie Polea Puleggia Ref. 21	Pulley Riemschijf Remskiva Riemenscheibe Poulie Polea Puleggia Ref. 28
GA11	**LEROY SOMER LS 160 M-4**			
GA11-7.5	1080 2743 11	220VD/50Hz	1202 6174 04	1202 6175 02
GA11-7.5	1080 2743 12	380VD/50Hz	1202 6174 04	1202 6175 02
GA11-7.5	1080 2743 13	415VD/50Hz	1202 6174 04	1202 6175 02
GA11-7.5	1080 2743 15	400VD/50Hz	1202 6174 04	1202 6175 02
GA11-100	1080 2743 19	220-230VD/60Hz	1202 6174 06	1202 6175 02
GA11-100	1080 2743 18	380VD/60Hz	1202 6174 06	1202 6175 02
GA11-100	1080 2743 19	440-460VD/60Hz	1202 6174 06	1202 6175 02
GA11-125	1080 2743 19	220-230VD/60Hz	1202 6174 06	1202 6175 01
GA11-125	1080 2743 19	440-460VD/60Hz	1202 6174 06	1202 6175 01
GA11-150	1080 2743 19	220-230VD/60Hz	1202 6174 08	1202 6175 01
GA11-150	1080 2743 19	440-460VD/60Hz	1202 6174 08	1202 6175 01
GA11-125	1080 2743 20	575VD/60Hz	1202 6174 06	1202 6175 01
GA15	**LEROY SOMER LS 160 L-4**			
GA15-7.5	1080 2744 11	220VD/50Hz	1202 6174 01	1202 6175 04
GA15-7.5	1080 2744 12	380VD/50Hz	1202 6174 01	1202 6175 04
GA15-7.5	1080 2744 13	415VD/50Hz	1202 6174 01	1202 6175 04
GA15-7.5	1080 2744 15	400VD/50Hz	1202 6174 01	1202 6175 04
GA15-100	1080 2744 19	220-230VD/60Hz	1202 6174 02	1202 6175 04
GA15-100	1080 2744 18	380VD/60Hz	1202 6174 02	1202 6175 04
GA15-100	1080 2744 19	440-460VD/60Hz	1202 6174 02	1202 6175 04
GA15-125	1080 2744 19	220-230VD/60Hz	1202 6174 03	1202 6175 03
GA15-125	1080 2744 19	440-460VD/60Hz	1202 6174 03	1202 6175 03
GA15-150	1080 2744 19	220-230VD/60Hz	1202 6174 05	1202 6175 03
GA15-150	1080 2744 18	380VD/60Hz	1202 6174 05	1202 6175 03
GA15-150	1080 2744 19	440-460VD/60Hz	1202 6174 05	1202 6175 03
GA15-125	1080 2744 20	575VD/60Hz	1202 6174 03	1202 6175 03
GA15-10	1080 2744 11	220VD/50Hz	1202 6174 03	1202 6175 03
GA15-10	1080 2744 12	380VD/50Hz	1202 6174 03	1202 6175 03
GA15-10	1080 2744 13	415VD/50Hz	1202 6174 03	1202 6175 03
GA15 SAA	**LEROY SOMER LS 160 LA-4**			
GA15-100 SAA	1080 2745 18	380VD/60Hz	1202 6174 02	1202 6175 04
GA15-150 SAA	1080 2745 18	380VD/60Hz	1202 6174 05	1202 6175 03
GA18	**LEROY SOMER LS 160 LA-4**			
GA18-7.5	1080 2745 11	220VD/50Hz	1202 6174 03	1202 6175 07
GA18-7.5	1080 2745 12	380VD/50Hz	1202 6174 03	1202 6175 07
GA18-7.5	1080 2745 13	415VD/50Hz	1202 6174 03	1202 6175 07
GA18-7.5	1080 2745 15	400VD/50Hz	1202 6174 03	1202 6175 07
GA18-100	1080 2745 19	220-230VD/60Hz	1202 6174 04	1202 6175 06
GA18-100	1080 2745 19	440-460VD/60Hz	1202 6174 04	1202 6175 06
GA18-125	1080 2745 19	220-230VD/60Hz	1202 6174 05	1202 6175 05
GA18-125	1080 2745 19	440-460VD/60Hz	1202 6174 05	1202 6175 05
GA18-150	1080 2745 19	220-230VD/60Hz	1202 6174 07	1202 6175 05
GA18-150	1080 2745 18	380VD/60Hz	1202 6174 07	1202 6175 05
GA18-150	1080 2745 19	440-460VD/60Hz	1202 6174 07	1202 6175 05
GA18-125	1080 2745 20	575VD/60Hz	1202 6174 05	1202 6175 05
GA18-10	1080 2745 11	220VD/50Hz	1202 6174 06	1202 6175 05
GA18-10	1080 2745 12	380VD/50Hz	1202 6174 06	1202 6175 05
GA18-10	1080 2745 13	415VD/50Hz	1202 6174 06	1202 6175 05

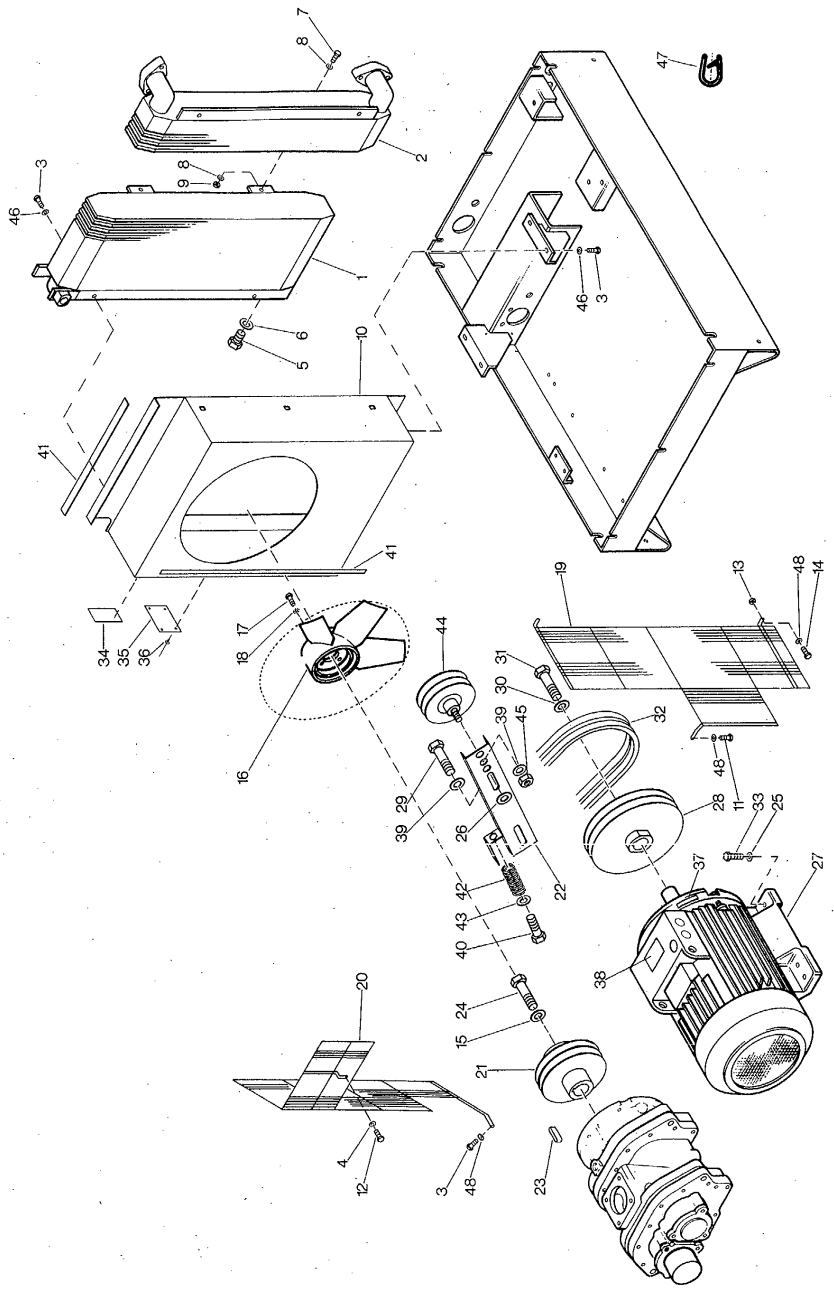
7
8
2
3
46
8
9
1
6
5
10
41
41
34
35
36
17
18
16
44
39
45
29
39
26
42
43
40
22
20
24
15
21
4
12
3
48
23
47
46
3
19
13
48
14
31
30
32
48
11
28
33
25
37
27
38

Compressor Kompressor Kompressor Kompressor Compresseur Compresor Compressore	Motor Motor Motor Motor Moteur Motor Motore Ref. 27	Designation Beschrijving Benämning Bezeichnung Désignation Designación Descrizione	Pulley Riemschijf Remskiva Riemenscheibe Poulie Polea Puleggia Ref. 21	Pulley Riemschijf Remskiva Riemenscheibe Poulie Polea Puleggia Ref. 28
GA18 SAA	**LEROY SOMER LS 160 LB-4**			
GA18-150 SAA	1080 2746 18	380VD/60Hz	1202 6174 07	1202 6175 05
GA22	**LEROY SOMER LS 160 LB-4**			
GA22-7.5	1080 2746 11	220VD/50Hz	1202 6174 01	1202 6175 08
GA22-7.5	1080 2746 12	380VD/50Hz	1202 6174 01	1202 6175 08
GA22-7.5	1080 2746 13	415VD/50Hz	1202 6174 01	1202 6175 08
GA22-7.5	1080 2746 15	400VD/50Hz	1202 6174 01	1202 6175 08
GA22-100	1080 2746 19	220-230VD/60Hz	1202 6174 02	1202 6175 07
GA22-100	1080 2746 18	380VD/60Hz	1202 6174 02	1202 6175 07
GA22-100	1080 2746 19	440-460VD/60Hz	1202 6174 02	1202 6175 07
GA22-125	1080 2746 19	220-230VD/60Hz	1202 6174 03	1202 6175 06
GA22-125	1080 2746 19	440-460VD/60Hz	1202 6174 03	1202 6175 06
GA22-150	1080 2746 19	220-230VD/60Hz	1202 6174 05	1202 6175 06
GA22-150	1080 2746 18	380VD/60Hz	1202 6174 05	1202 6175 06
GA22-150	1080 2746 19	440-460VD/60Hz	1202 6174 05	1202 6175 06
GA22-125	1080 2746 20	575VD/60Hz	1202 6174 03	1202 6175 06
GA22-10	1080 2746 11	220VD/50Hz	1202 6174 03	1202 6175 07
GA22-10	1080 2746 12	380VD/50Hz	1202 6174 03	1202 6175 07
GA22-10	1080 2746 13	415VD/50Hz	1202 6174 03	1202 6175 07

Ref.	A	B	C	D	Designation
1	1202 9735 00			1	Oil cooler
2	1202 9738 00			1	Aftercooler
3	1619 5337 01			9	Bolt
4	0302 1274 02			1	Washer
5	0686 3716 03			1	Plug
6	0653 1062 00			1	Gasket
7	0147 1323 03			2	Bolt
8	0301 2335 00			4	Washer
9	0266 2110 00			2	Nut
10	1202 6190 00			1	Fan cowl
11	1619 2766 00			1	Bolt
12	0147 1360 03			1	Bolt
13	1079 0298 01			2	Nut
14	1079 1472 05			2	Bolt
15	1202 6185 00			1	Washer
16	1612 4204 00			1	Fan
17	0147 1322 03			4	Bolt
18	0333 3227 00			4	Lock washer
19	1202 6212 00			1	Fan guard
20	1202 6211 00			1	Fan guard
21	- - -		1)	1	Pulley
22	1202 6184 00			1	Support
23	0337 6063 00			1	Key
24	0147 1420 03			1	Bolt
25	0301 2358 00			4	Washer
26	1202 6214 00			2	Washer
27	- - -		1)	1	Motor
28	- - -		1)	1	Pulley
29	0147 1480 03			2	Bolt
30	1612 3928 00			1	Washer
31	0147 1478 03			1	Bolt
32				2	V-belt kit
	2901 0022 00				**GA11,GA15**
	2901 0023 00				**GA18,GA22**
33	0147 1404 03			4	Bolt
34	1079 9901 09			1	Decal
35	1091 1204 00			1	Patent plate
36	0129 3103 00			4	Pop rivet
37	1503 0786 00			1	Label
38	1088 1001 03			1	Warning mark
39	0302 1274 04			3	Washer
40	0147 1500 12			1	Bolt
41	1619 5188 00			AR	Seal
42	1202 6311 00			1	Spring
43	1202 6219 00			1	Washer
44	1202 6205 00		1	1	Tension pulley
45	0291 1114 00		1	1	Lock nut
46	0303 1274 01			8	Washer
47	1503 1056 00			AR	Seal
48	0300 8005 00			4	Washer

1 Kit 2901 0013 00

1) See motor list / Zie motorlijst / Se motorlista / Siehe Motorliste / Voir liste de moteurs / Véase lista de motores / Vedere elenco motori

30_105_5_0_0

Oil stop valve
Olieafsluitklep
Avstängningsventil, olja
Ölabsperrventil
Soupape d'arrêt d'huile
Válvula de cierre de aceite
Valvola di arresto dell'olio

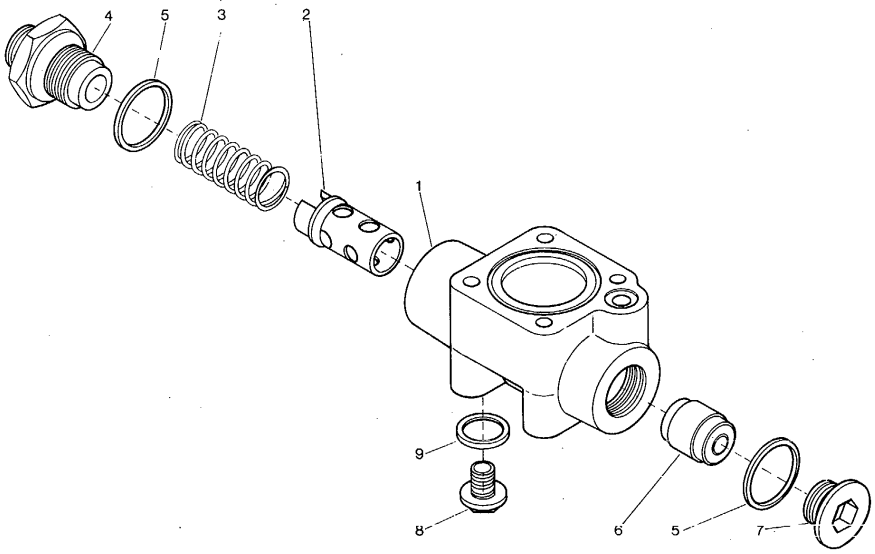

Ref.	A	B	C	D	Designation
-	1613 2355 81		.....	1	Oil stop valve
1	* * *	•	.....	1	Housing
2	1613 2356 00	•	.....	1	Valve
3	1613 2357 00	•	1	1	Spring
4	1612 2624 00	•	.....	1	Nipple
5	0661 1049 00	•	1	2	Gasket
6	1613 2359 00	•	.....	1	Piston
7	0686 6448 00	•	.....	1	Plug
8	0686 4204 00	•	.....	1	Plug
9	0661 1033 00	•	1.....	1	Gasket

1 Kit 2901 0016 00

22_064_0_1_1

Minimum pressure valve
Minimumdrukklep
Minimitryckventil
Mindestdruckventil
Soupape à minimum de pression
Válvula de presión mínima
Valvola di minima pressione

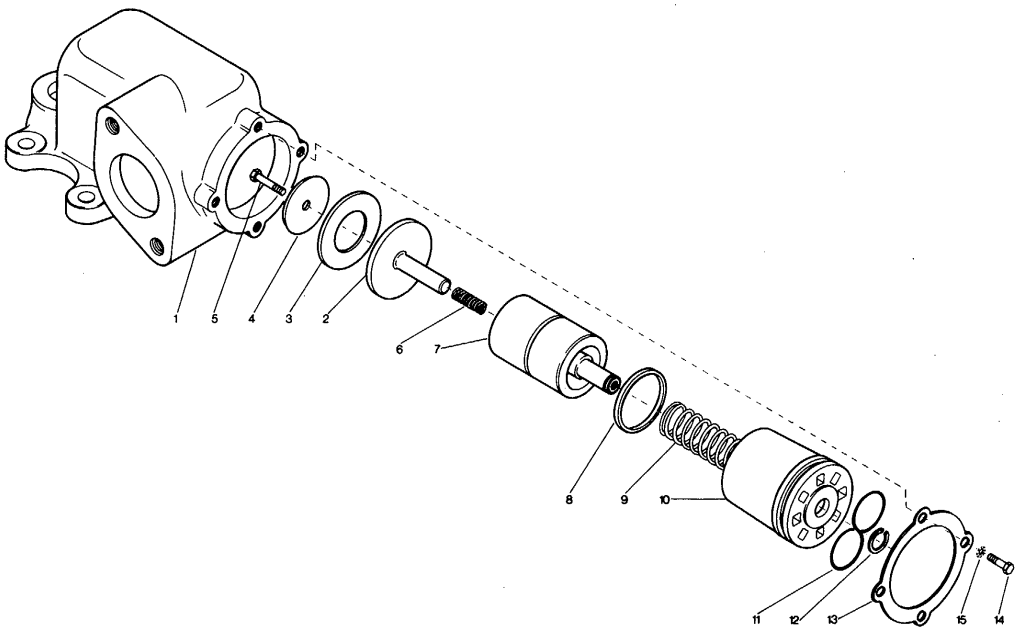

Ref.	A	B	C	D	Designation
-	1613 3219 84		.....	1	Minimum pressure valve
1	* * *	•	.....	1	Housing
2	1613 3221 00	•	.....	1	Valve
3	1613 3223 01	•	1	1	Washer
4	1613 3222 00	•	.....	1	Washer
5	0147 1244 03	•	.....	1	Bolt
6	1612 4049 00	•	1	1	Spring
7	1613 3220 00	•	.....	1	Piston
8	1619 6928 00	•	1	1	Seal ring
9	1612 4048 00	•	1	1	Spring
10	1613 2354 01	•	.....	1	Housing
11	0663 7135 00	•	1.....	1	O-ring
12	0335 3111 00	•	1.....	1	Circlip
13	1613 3263 00	•	.....	1	Cover
14	0147 1246 03	•	.....	4	Bolt
15	0333 3220 00	•	1.....	4	Lock washer

1 Kit 2901 0005 00

22_035_0_4_2

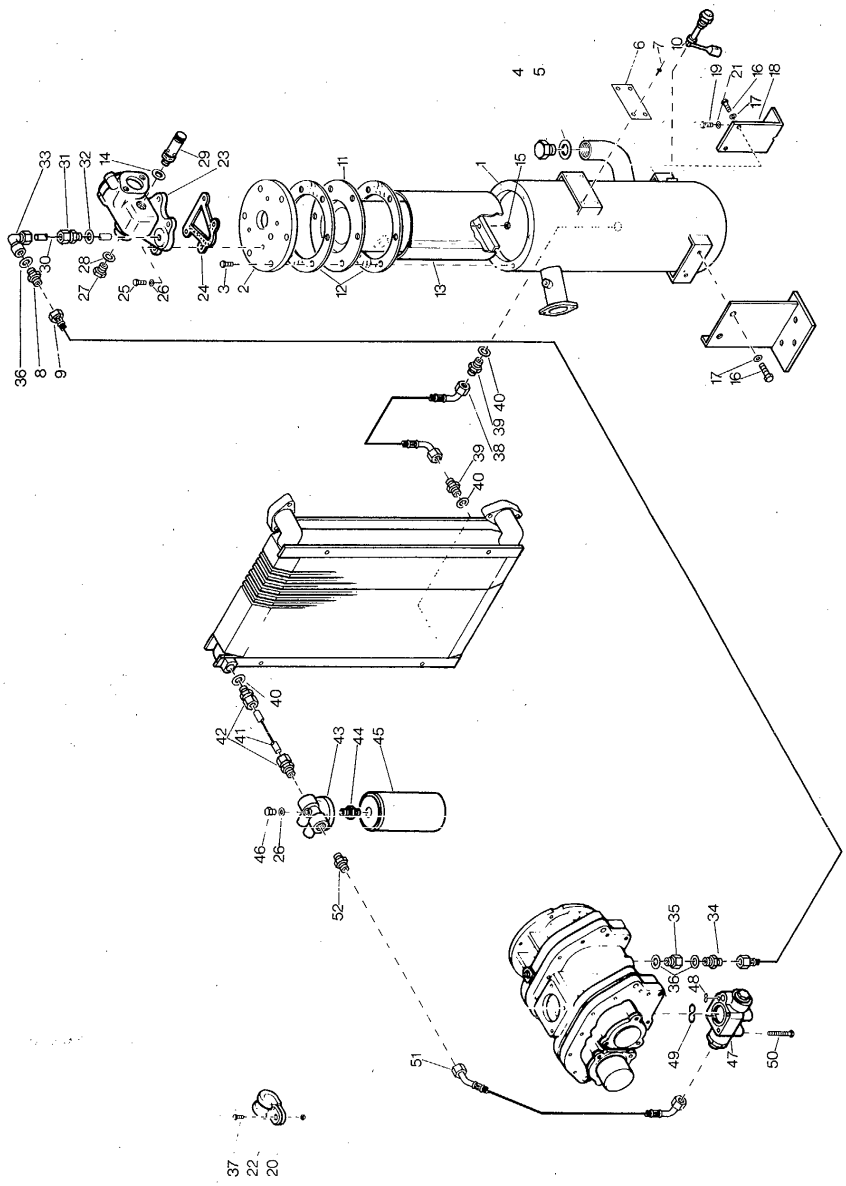
33
31
32
14
29
23
30
28
27
25
26
24
3
2
11
12
13
1
15
4
5
6
7
10
19
21
16
18
17
36
8
9
17
16
40
39
38
39
40
40
42
41
43
44
45
46
26
52
35
34
36
48
49
47
50
51
37
22
20

Air receiver and oil system (welded receiver)
Luchtketel en oliesysteem (gelaste ketel)
Luftbehållare och oljesystem (svetsad behållare)
Luftbehälter und Ölkreislauf (geschweißter Behälter)
Réservoir d'air et système d'huile (réservoir soudé)
Depósito de aire y sistema de aceite (depósito soldado)
Serbatoio dell'aria e sistema dell'olio (serbatoio saldato)

Ref.	A	B	C	D	Designation
-	1613 4950 80		L	1	Air receiver
	1613 4950 81		N	1	Air receiver
	1613 4950 82		As	1	Air receiver
	1613 4950 83		T	1	Air receiver
	1613 4950 84		Ta	1	Air receiver
	1613 4950 85		D	1	Air receiver
	1613 4950 86		Sa	1	Air receiver
	1613 4950 89		S	1	Air receiver
1	* * *	•		1	Vessel
2	1613 4946 00	•		1	Cover
	1613 4946 01	•	(As)	1	Cover
	1613 4946 09	•	(S)	1	Cover
3	0147 1401 03	•		6	Bolt
	0147 1401 17	•	(T,Ta)	6	Bolt
4	2250 2528 00	•		1	Plug
5	0653 1227 00	•		1	Gasket
6	0690 3132 00	•	(L,Ta,N)	1	Data plate
	1613 5420 00	•	(As)	1	Data plate
	1612 0910 00	•	(Sa)	1	Data plate
	1613 0910 07	•	(T)	1	Data plate
	1613 0910 08	•	(S)	1	Data plate
	1613 0910 20	•	(D)	1	Data plate
7	1619 1646 00	•		4	Rivet
	1202 5205 00	•	(As)	4	Rivet
8	1079 5840 01			1	Nipple
9	0574 9842 05			1	Hose assembly
10	1616 5108 00			1	Level gauge
11	1612 3869 00		**4**	1	Element
12	1202 7002 00		**4**	2	Gasket
13	1612 3873 00			1	Shield
14	0653 1124 00		3)4)	1	Gasket
15	0291 1110 00			1	Lock nut
16	1619 5337 01			4	Bolt
17	0303 1274 01			4	Washer
18	1612 4077 00			1	Support
19	0147 1400 03			1	Bolt
20	0266 2108 00			2	Nut
21	0302 1274 02			2	Washer
22	1613 0801 05			4	Clamp
23	- - -			1	Min. press. vlv.
24	1202 9973 00		**3,4**	1	Gasket
25	0147 1362 03			4	Bolt
26	0653 1046 00		**3,4**	5	Gasket
27	0686 4208 00			1	Plug
28	0653 1189 00			1	Gasket
29				1	Safety valve
	0830 1005 09		1)T		**9.3 bar**
	0830 1005 10		2)T		**11 bar**
	1310 0161 00		3)As		**9.3 bar**
	0830 1005 18		4)As		**10.5 bar**
30	2900 0134 00			AR	Pipe
31	1612 3899 00			1	Coupling
-	0584 0314 01	•		1	Clamp ring
-	0584 2314 01	•		1	Nut
32	0661 1033 00			1	Gasket
33	0581 1200 21			1	Elbow
-	0584 0314 01	•		1	Clamp ring
-	0584 2314 01	•		1	Nut
34	1619 5205 00			1	Nipple
35	1614 4184 01			1	Nozzle
36	0653 1062 00			3	Gasket
37	0147 1246 03			2	Bolt
38	1202 8171 00			1	Hose assembly
39	1619 5509 00			2	Nipple
40	0661 1038 00			3	Gasket
41	1202 6218 00			1	Pipe
42	1020 5160 03			2	Coupling
-	0584 0430 00	•		1	Clamp ring
-	0584 2433 00	•		1	Nut
43	1612 2668 00			1	Housing
44	1619 3770 00			1	Nipple
45	1613 6105 00		**1**	1	Oil filter
46	0686 4201 03			1	Plug
47	- - -			1	Oil stop valve
48	0663 3120 00		**2**	1	O-ring
49	0663 7135 00		**2**	1	O-ring
50	0147 1336 03			4	Bolt
51	1202 8172 00			1	Hose assembly
52	1202 6213 00			1	Adaptor

1 Kit 2901 0000 00
2 Kit 2901 0016 00
3 Kit 2901 0005 00
4 Kit 2901 0003 00
1) 7.5bar/50Hz
2) 10bar/50Hz
3) 100-125psi/60Hz
4) 150psi/60Hz

39_184_1_0_1

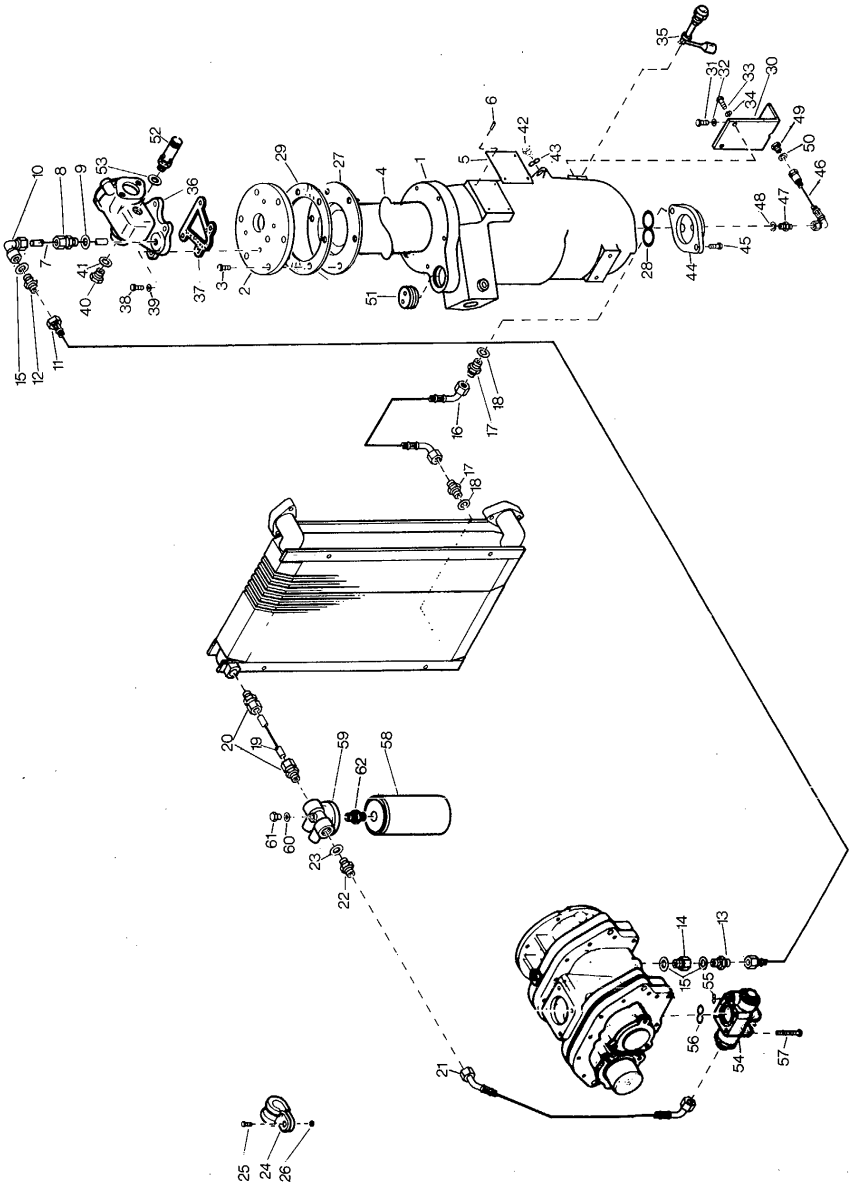
1
2
3
4
5
6
7
8
9
10
11
12
13
14
15
16
17
18
19
20
21
22
23
24
25
26
27
28
29
30
31
32
33
34
35
36
37
38
39
40
41
42
43
44
45
46
47
48
49
50
51
52
53
54
55
56
57
58
59
60
61
62

Air receiver and oil system (cast receiver)
Luchtketel en oliesysteem (gegoten ketel)
Luftbehållare och oljesystem (gjuten behållare)
Luftbehälter und Ölkreislauf (gegossener Behälter)
Réservoir d'air et système d'huile (réservoir en fonte)
Depósito de aire y sistema de aceite (depósito fundido)
Serbatoio dell'aria e sistema dell'olio (serbatoio di fusione)

Ref.	A	B	C	D	Designation
-	1202 8521 82		L,As,D,Sa	1	Air receiver
	1202 8521 89		S	1	Air receiver
1	* * *	•		1	Vessel
2	1202 9983 00	•	(L,D, Sa,As)	1	Cover
	1202 9984 00	•	(S)	1	Cover
3	0147 1957 90	•	As,Sa (L,D)	6	Bolt
	0147 1401 03	•	(S)	6	Bolt
4	0663 7155 00	•	**4**	1	O-ring
5	1202 9706 00	•	(L,D, Sa,As)	1	Data plate
	1613 0910 08	•	(S)	1	Data plate
6	0244 4184 00	•		4	Screw
7	1612 3992 00			1	Pipe
8	1612 3899 00			1	Coupling
-	0584 0314 01	•		1	Clamp ring
-	0584 2314 01	•		1	Nut
9	0661 1033 00			1	Gasket
10	0581 1200 21			1	Elbow
-	0584 0314 01	•		1	Clamp ring
-	0584 2314 01	•		1	Nut
11	0574 9842 05			1	Hose assembly
12	1079 5840 01			1	Nipple
13	1619 5205 00			1	Nipple
14	1614 4184 01			1	Nozzle
15	0653 1062 00			3	Gasket
16	1202 8171 00			1	Hose assembly
17	1619 5509 00			2	Nipple
18	0661 1038 00			2	Gasket
19	1202 6218 00			1	Pipe
20	1020 5160 03			2	Coupling
-	0584 0430 00	•		1	Clamp ring
-	0584 2433 00	•		1	Nut
21	1202 8172 00			1	Hose assembly
22	1202 6213 00			1	Adapter
23	0661 1038 00			1	Gasket
24	1613 0801 05			4	Clamp
25	0147 1246 03			2	Bolt
26	0266 2108 00			2	Nut
27	1612 3869 00		**4**	1	Element
28	0663 7142 00			1	O-ring
29	1202 7002 00		**4**	1	Gasket
30	1612 4077 00			1	Support
31	0147 1400 03			1	Bolt

Ref.	A	B	C	D	Designation
32	0302 1274 02			2	Washer
33	1619 5337 01			4	Bolt
34	0303 1274 01			4	Washer
35	1616 5108 00			1	Level gauge
36	- - -			1	Min.press.valve
37	1202 9973 00		**3,4**	1	Gasket
38	0147 1362 03			4	Bolt
39	0653 1046 00		**3,4**	4	Gasket
40	0686 4208 00			1	Plug
41	0653 1189 00			1	Gasket
42	1202 8992 00			1	Plug
43	0663 2102 15			1	O-ring
44	1202 9429 00			1	Cover
45	0147 1401 03			2	Bolt
46	1202 6216 00			1	Flexible
47	1079 5840 12			1	Coupling
48	0661 1033 00			1	Gasket
49	0686 3802 00			1	Plug
50	0661 1020 00			1	Gasket
51	9820 1641 00			1	Plug
52				1	Safety valve
	0830 1005 09				**7.5 bar**
	0830 1005 10				**10 bar**
	1310 0161 00				**100-125 psi**
	0830 1005 18				**150 psi**
53	0653 1124 00			1	Gasket
					USA
54	- - -			1	Oil stop valve
55	0663 3120 00		**2**	1	O-ring
56	0663 7135 00		**2**	1	O-ring
57	0147 1336 03			4	Bolt
58	1613 6105 00		**1**	1	Oil filter
59	1612 2668 00			1	Housing
60	0653 1046 00			1	Gasket
61	0686 4201 03			1	Plug
62	1619 3770 00			1	Nipple

1 Kit 2901 0000 00
2 Kit 2901 0016 00
3 Kit 2901 0005 00
4 Kit 2901 0003 00

39_216_0_0_1

Air, regulating and drain connections (welded receiver)
Lucht-, regel- en aftapaansluitingen (gelaste ketel)
Luft-, reglerings- och avtappningsanslutningar (svetsad behållare)
Luft-, Regel- und Ablaßanschlüsse (geschweißter Behälter)
Connexions d'air, de régulation et de vidange (réservoir soudé)
Conexiones de aire, de regulación y de drenaje (depósito soldado)
Collegamenti per aria, regolazione - scarico (serbatoio saldato)

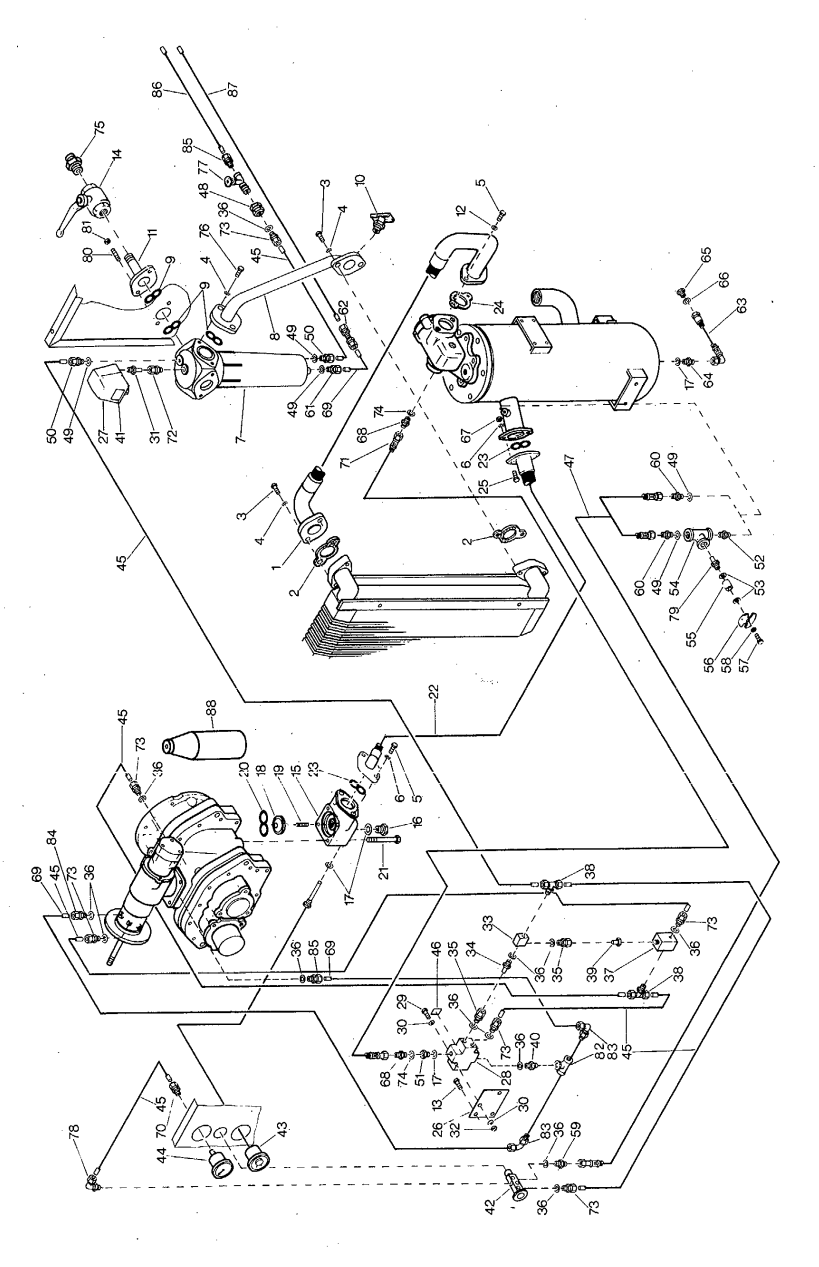

Ref.	A	B	C	D	Designation
1	1612 3990 00			1	Hose assembly
2	1612 3986 00			2	Gasket
3	0147 1365 03			4	Bolt
4	0333 3232 00			6	Lock washer
5	0147 1402 03			4	Bolt
6	0333 3237 00		3,4	6	Lock washer
7	1202 6386 00			1	Moisture trap
-	2900 1017 00	•	1	1	Drain valve
-	0663 2101 71	••		1	O-ring
8	1202 6192 00			1	Pipe
9	0663 7136 00		1	3	O-ring
10	0858 1204 00			1	Drain cock
11				1	Pipe
	1202 6195 00				**GA18,GA22**
	1202 6194 00				**GA11,GA15**
12	0301 2358 00			2	Washer
13	1619 2766 00			2	Bolt
14				1	Valve
	1619 6153 07				**GA18,GA22**
	1619 6153 06				**GA11,GA15**
15	1202 6566 00			1	Housing
16	0686 4204 00			1	Plug
17	0661 1033 00		4	4	Gasket
18	1202 6456 00			1	Check valve
19	1613 5165 00		4	1	Spring
20	0663 7138 00		4	1	O-ring
21	0147 1373 03			4	Bolt
22	1612 4086 00			1	Hose assembly
23	0663 9868 00		3,4	2	O-ring
24	1202 7001 00		2,3	1	Gasket
25	0147 1404 03			2	Bolt
26	1202 6196 00			1	Support
27				1	Press. switch
	1089 0397 36				**7.5bar,100psi,125psi**
	1089 0397 37				**10bar,150psi**
28	1619 5332 01			1	Vent valve
-	2901 0015 00	•		1	Vent valve kit
29	0147 1255 03			2	Bolt
30	0301 2321 00			4	Washer
31	0581 0000 36			1	Adapter
32	0266 2108 00			2	Nut
33	8204 0930 10			1	Shuttle valve
34	1615 3624 00			1	Nozzle
35	0581 0025 01			2	Coupling
-	0584 0314 01	•		1	Clamp ring
-	0584 2314 01	•		1	Nut
36	0653 1046 00			11	Gasket
37				1	Solenoid valve
	1089 0351 30				**50Hz**
	1089 0351 07				**60Hz**
38	0581 2000 13			2	Tee
-	0584 0080 09	•		2	Clamp ring
-	0584 0080 11	•		2	Nut
39	1615 4011 00			1	Nozzle
40	0603 5105 03			1	Nipple
41	1079 9905 39			1	Label
42	1619 7000 00			1	3-way valve
43	1089 0502 18			1	Temp. switch
44				1	Press. gauge
	1619 5268 00				**50Hz**
	1310 0154 00				**60Hz**
45	0070 6002 04			AR	Hose
46	1088 1001 04			1	Warning mark
47	0574 9841 04			1	Hose assembly
48	0581 0000 43			1	Coupling
49	0653 1062 00			4	Gasket
50	0581 0000 34			2	Coupling
-	0584 0080 09	•		1	Clamp ring

Ref.	A	B	C	D	Designation
-	0584 0080 11	•		1	Nut
51	0605 8816 03			1	Bushing
52	0603 4102 03		(T)	1	Nipple
53	0653 1062 00		(T)	2	Gasket
54	0564 0003 04		(T)	1	Tee
55	0607 2152 01		(T)	1	Socket
56	1612 2845 00		(T)	1	Flange
57	0147 1320 03		(T)	1	Bolt
58	0653 1033 00		(T)	1	Gasket
59	1079 5840 01			1	Nipple
60	1619 5205 00			1	Nipple
61	0581 0000 35			1	Coupling
-	0584 0080 10	•		1	Clamp ring
-	0584 0080 12	•		1	Nut
62	0581 0000 55			1	Coupling
-	0584 0080 10	•		1	Clamp ring
-	0584 0080 12	•		1	Nut
63	1202 6216 00			1	Hose assembly
64	1079 5840 12			1	Pipe coupling
65	0686 3802 00			1	Plug
66	0661 1020 00			1	Gasket
67	0266 2112 00			2	Nut
68	1079 5840 14			2	Nipple
69	0070 6002 05			AR	Hose
70	0584 9904 00			1	Coupling
71	0574 8872 45			1	Hose assembly
72	0581 0000 37			1	Coupling
73	0581 0000 33			8	Coupling
-	0584 0080 09	•		1	Clamp ring
-	0584 0080 11	•		1	Nut
74	0653 1100 00			2	Gasket
75				1	Adaptor
	0603 4100 26				**GA18-60Hz,**
					GA22-60Hz
	0603 4100 25				**GA11-60Hz,**
					GA15-60Hz
76	0147 1363 03			2	Bolt
77	1619 7336 00			1	Valve
78	0581 1200 16			1	Elbow
79	1615 3199 00		(T)	1	Nozzle
80	0246 1238 04			2	Stud
81	0291 1111 00			2	Locknut
82	0564 0000 24			1	Tee
83	0581 1200 23			2	Elbow
-	0581 0000 24	•		1	Clamp ring
-	0584 0080 12	•		1	Nut
84	0581 0000 38			1	Coupling
-	0581 0000 24	•		1	Clamp ring
-	0584 0080 12	•		1	Nut
85	0581 0000 33		1)	1	Coupling
86	0070 6002 04		1)	AR	Hose
87	0070 6002 05		1)	AR	Hose
88	0017 5200 31		1)2)	1l.	Oil

1 Kit 2901 0007 00
2 Kit 2901 0003 00
3 Kit 2901 0005 00
4 Kit 2901 0014 00

1) Loose delivered / Afzonderlijk geleverd / Levererad separat / Separat geliefert / Livrés séparément / Suministrado separadamente / Inviato sciolto

2) Not for USA / Niet voor USA / Inte för USA / Nicht für USA / Pas pour USA / No para USA / Non per USA

39_185_3_0_0

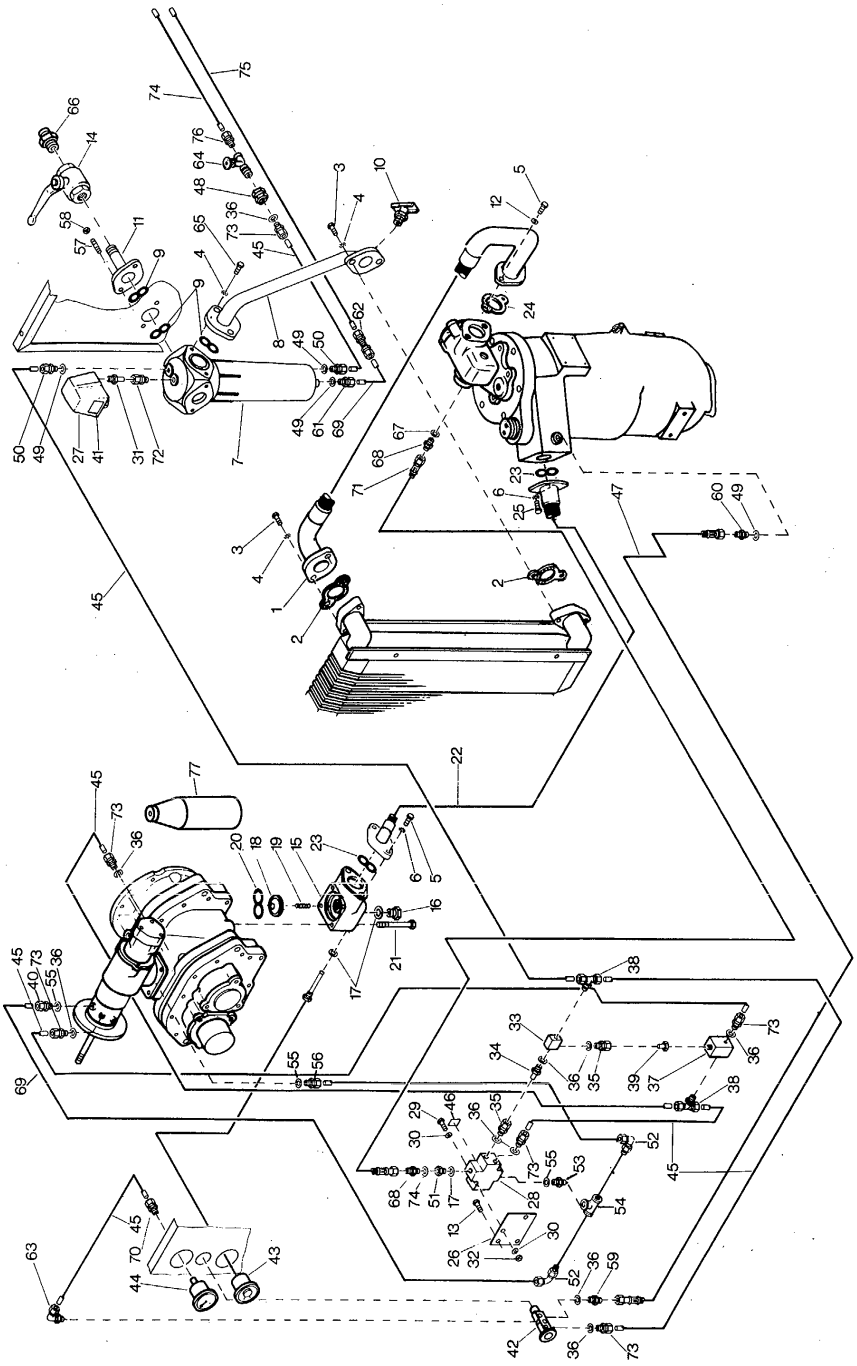

Air-, regulating- and drain connections (cast receiver)
Lucht-, regel- en aftapaansluitingen (gegoten ketel)
Luft-, reglerings- och avtappningsanslutningar (gjuten behållare)
Luft-, Regel- und Ablaßanschlüsse(gegossener Behälter)
Connexions d'air, de régulation et de vidange (réservoir en fonte)
Conexiones de aire, de regulación y de drenaje (depósito fundido)
Collegamenti per aria, regolazione - scarico (serbatoio di fusione)

Ref.	A	B	C	D	Designation
1	1612 3990 00			1	Hose assembly
2	1202 9756 00			2	Gasket
3	0147 1365 03			4	Bolt
4	0333 3232 00			6	Lock washer
5	0147 1402 03			4	Bolt
6	0333 3237 00		3,4	6	Lock washer
7	1202 6386 00			1	Moisture trap
-	2900 1017 00	•	1	1	Drain valve
-	0663 2101 71	••		1	O-ring
8	1202 6192 00			1	Pipe
9	0663 7136 00		1	3	O-ring
10	0858 1204 00			1	Drain cock
11				1	Pipe
	1202 6195 00				**GA18,GA22**
	1202 6194 00				**GA11,GA15**
12	0301 2358 00			2	Washer
13	1619 2766 00			2	Bolt
14				1	Valve
	1619 6153 07				**GA18,GA22**
	1619 6153 06				**GA11,GA15**
15	1202 6566 00			1	Housing
16	0686 4204 00			1	Plug
17	0661 1033 00		4	3	Gasket
18	1202 6456 00			1	Check valve
19	1613 5165 00		4	1	Spring
20	0663 7138 00		4	1	O-ring
21	0147 1373 03			4	Bolt
22	1612 4086 00			1	Hose assembly
23	0663 9868 00		3,4	2	O-ring
24	1202 7001 00		2,3	1	Gasket
25	0147 1404 03			2	Bolt
26	1202 6196 00			1	Support
27				1	Press. switch
	1089 0397 36				**7.5bar,100psi,125psi**
	1089 0397 37				**10bar,150psi**
28	1619 5332 01			1	Vent valve
-	2901 0015 00	•		1	Vent valve kit
29	0147 1255 03			2	Bolt
30	0301 2321 00			4	Washer
31	0581 0000 36			1	Adapter
32	0266 2108 00			2	Nut
33	8204 0930 10			1	Shuttle valve
34	1615 3624 00			1	Nozzle
35	0581 0025 01			2	Coupling
-	0584 0314 01	•		1	Clamp ring
-	0584 2314 01	•		1	Nut
36	0653 1046 00			8	Gasket
37				1	Solenoid valve
	1089 0351 30				**50Hz**
	1089 0351 07				**60Hz**
38	0581 2000 13			2	Tee
-	0584 0080 09	•		2	Clamp ring
-	0584 0080 11	•		2	Nut
39	1615 4011 00			1	Nozzle
40	0581 0000 38			1	Coupling
-	0581 0000 24	•		1	Clamp ring
-	0584 0080 12	•		1	Nut
41	1079 9905 39			1	Label
42	1619 7000 00			1	3-way valve
43	1089 0502 18			1	Temp. switch
44				1	Press. gauge
	1619 5268 00				**50Hz**
	1310 0154 00				**60Hz**
45	0070 6002 04			AR	Hose
46	1088 1001 04			1	Warning mark
47	0574 9841 04			1	Hose assembly
48	0581 0000 43			1	Coupling
49	0653 1062 00			5	Gasket
50	0581 0000 34			2	Coupling
-	0584 0080 09	•		1	Clamp ring
-	0584 0080 11	•		1	Nut
51	0605 8816 03			1	Bushing
52	0581 1200 23			2	Elbow
-	0581 0000 24	•		1	Clamp ring
-	0584 0080 12	•		1	Nut
53	0603 5105 03			1	Nipple
54	0564 0000 24			1	Tee
55	0653 1046 00			3	Gasket
56	0581 0000 59			1	Coupling
-	0581 0000 24	•		1	Clamp ring
-	0584 0080 12	•		1	Nut
57	0246 1238 04			2	Stud
58	0291 1111 00			2	Locknut
59	1079 5840 01			1	Nipple
60	1619 5205 00			1	Nipple
61	0581 0000 35			1	Coupling
-	0584 0080 10	•		1	Clamp ring
-	0584 0080 12	•		1	Nut
62	0581 0000 55			1	Coupling
-	0584 0080 10	•		1	Clamp ring
-	0584 0080 12	•		1	Nut
63	0581 1200 16			1	Elbow
64	1619 7336 00			1	Valve
65	0147 1363 03			2	Bolt
66				1	Adapter
	0603 4100 26				**GA18-60Hz,**
					GA22-60Hz
	0603 4100 25				**GA11-60Hz,**
					GA15-60Hz
67	0653 1100 00			2	Gasket
68	1079 5840 14			2	Nipple
69	0070 6002 05			AR	Hose
70	0584 9904 00			1	Coupling
71	0574 8872 45			1	Hose assembly
72	0581 0000 37			1	Coupling
73	0581 0000 33			7	Coupling
-	0584 0080 09	•		1	Clamp ring
-	0584 0080 11	•		1	Nut
74	0070 6002 04		1)	AR	Hose
75	0070 6002 05		1)	AR	Hose
76	0581 0000 33		1)	1	Coupling
77	0017 5200 31		1)2)	1l.	Oil

1 Kit 2901 0007 00
2 Kit 2901 0003 00
3 Kit 2901 0005 00
4 Kit 2901 0014 00

1) Loose delivered / Afzonderlijk geleverd / Levererad separat / Separat geliefert / Livrés séparément / Suministrado separadamente / Inviato sciolto

2) Not for USA / Niet voor USA / Inte för USA / Nicht für USA / Pas pour USA / No para USA / Non per USA

39_215_1_0_0

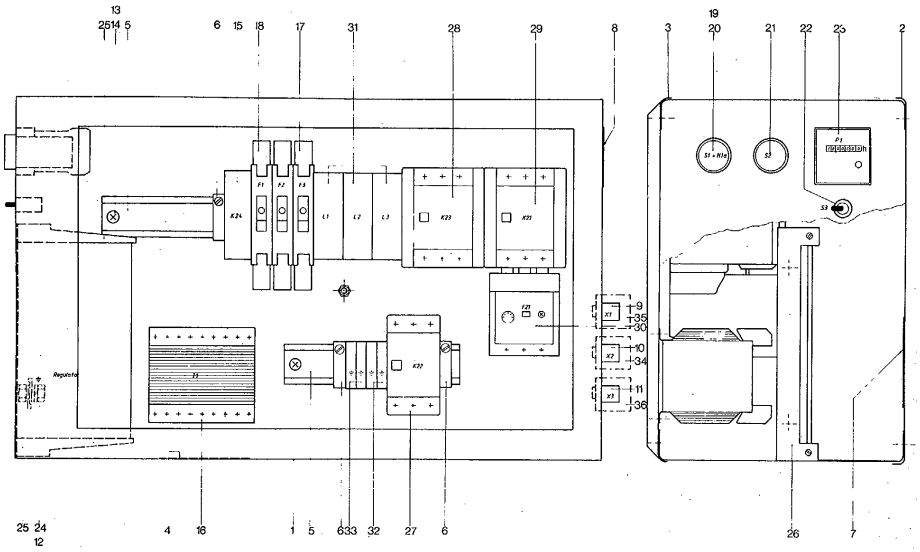
13
25 14 5
6 15 18 17 31 28 29 8 3 19 20 21 22 23 2
F1 F2 F3
K24
L1 L2 L3
K23
K21
F21
X1 X2 X3
9 35 30 10 34 11 36
K22
Regulator
25 24 12 4 16 1 5 6 33 32 27 6 26 7

Cubicle with star-delta starter **50 Hz**
Kast met ster-driehoek starter
Skåp med stjärn-triangelstartare
Kasten mit Stern-Dreieck Anlasser
Armoire avec démarreur étoile-triangle
Armario con arrancador estrella-triángulo
Armadio elettrico con apparecchiatura per l'avviamento stella/triangolo

Ref.	A	B	C	D	Designation
-				1	Cubicle
	1900 0523 02		1)		**GA11/380VD, GA11/400VD, GA11/415VD**
	1900 0523 03		2)		**GA15/400VD, GA15/415VD**
	1900 0523 04		3)		**GA15/380VD, GA18/380VD, GA18/400VD, GA18/415VD**
	1900 0523 06		4)		**GA11/220VD, GA15/220VD, GA22/380VD, GA22/400VD, GA22/415VD**
	1900 0523 08		5)		**GA18/220VD, GA22/220VD**
1	1202 8564 00	•		1	Box
2	1202 6209 00	•		1	Cover
3	1202 7403 00	•		1	Mounting panel
	1202 7403 01	•	5)	1	Mounting panel
4	1615 4435 00	•		1	Label
5	0090 1400 02	•		AR	Rail
6	1089 0506 30	•		1	End bracket
	1089 0506 30	•	5)	3	End bracket
7	9828 0241 02	•		1	Label
8	0690 3401 41	•		1	Data plate
9	1612 3819 01	•		1	Cable
10	1612 3818 01	•		1	Cable
11	1612 3820 01	•		1	Cable
-	1088 1301 02	•		30	Cable ty
12	1900 9999 01	•		1	Junct. box
13	0160 6093 00	•		2	Screw
14	0324 1132 00	•		2	Spacer
15	1089 9271 01	•		1	Time relay
16	1089 9136 13	•		1	Transformer
17	1089 9203 04	•		1	Circuit breaker
18	1089 9203 03	•		1	Circuit breaker
19	1089 0362 08	•		1	Push button
20	1091 0211 00	•		1	Bulb
21	1089 0362 05	•		1	Push button
22	1089 9051 01	•		1	Toggle switch
23	1089 9142 15	•		1	Hourmeter
24	1900 0020 07	•		1	Regulator
-	1089 9276 01	••		1	Shroud
25	1900 9999 02	•		1	Slide
26	1612 3814 00	•		1	Bracket
27	1089 9172 25	•	1)2)	1	Contactor
	1089 9172 26	•	3)	1	Contactor
	1089 9172 27	•	4)	1	Contactor
	1089 9172 29	•	5)	1	Contactor
28	1089 9172 27	•	1)2)	1	Contactor
	1089 9172 28	•	3)	1	Contactor
	1089 9172 29	•	4)	1	Contactor
	1089 9221 58	•	5)	1	Contactor
29	1089 9172 27	•	1)2)	1	Contactor
	1089 9172 28	•	3)	1	Contactor
	1089 9172 29	•	4)	1	Contactor
	1089 9221 58	•	5)	1	Contactor
30	1089 9169 31	•	1)	1	Overload relay
	1089 9169 33	•	2)	1	Overload relay
	1089 9169 32	•	3)	1	Overload relay
	1089 9169 46	•	4)	1	Overload relay
	1089 9169 54	•	5)	1	Overload relay
31	1089 0506 05	•	5)	3	Terminal
	1089 0506 07	•	1)2)	1	Terminal
	1089 0506 04	•	3)4)	1	Terminal
32	1089 0506 32	•		2	Terminal
33	1089 0506 10	•		2	Terminal
34	1612 3818 00			1	Cable
35	1612 3819 00			1	Cable
36	1612 3820 00			1	Cable
-	1088 1301 02			15	Cable ty

1).....5) Refers to note on cubicle part number / Verwijst naar nota bij onderdeelnummer van kast / Hänvisar till not på skåpets reservdelsnummer / Verweist auf die Note beim Teilnummer vom Kasten / Renvoie à la note avec le numéro de pièce de l'armoire / Remite a nota con número de parte del armario / Riferito alla nota sul N. Cat. dell'armadio

29_306_0_0_0

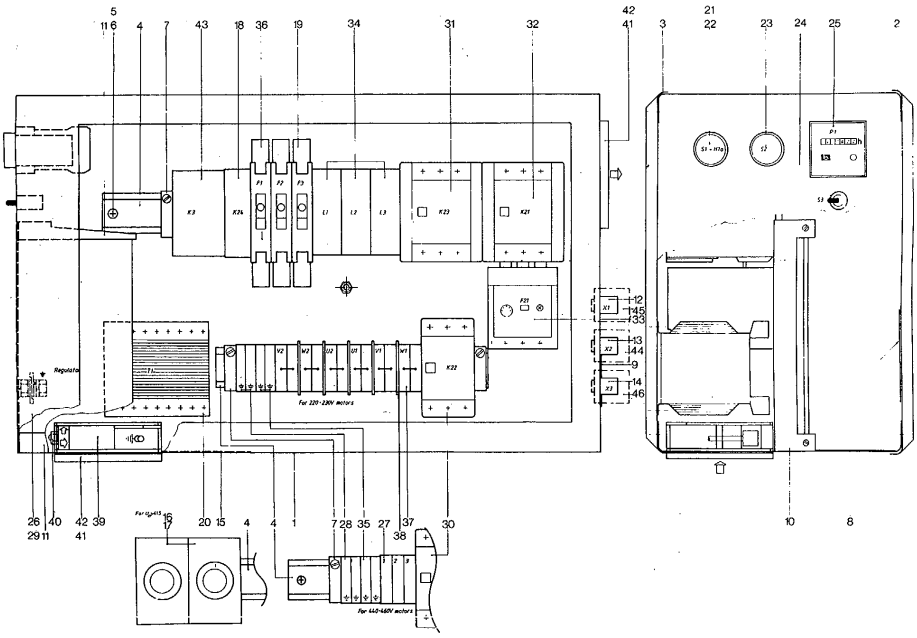
5
11 6
4
7
43
18
36
19
34
31
32
42
41
3
21
22
23
24
25
2
F1
F2
F3
K3
K24
L1
L2
L3
K23
K21
K20
X1
X2
X3
12
45
33
13
44
9
14
46
Regulator
K22
For 220-230V motors
26
29 11
40
42
41
39
For 15-415
16
17
20
15
4
4
1
7
28
35
27
38
37
30
10
8
For 440-480V motors

Cubicle with star-delta starter **60 Hz**
Kast met ster-driehoek starter
Skåp med stjärn-triangelstartare
Kasten mit Stern-Dreieck Anlasser
Armoire avec démarreur étoile-triangle
Armario con arrancador estrella-triángulo
Armadio elettrico con apparecchiatura per l'avviamento stella/triangolo

Ref.	A	B	C	D	Designation
-			.....	1	Cubicle
	1900 0523 12		1)		**GA11/440-460VD**
	1900 0523 14		2)		**GA15/440-460VD,**
			.....		**GA18/440-460VD,**
			.....		**GA11/380VD**
	1900 0523 16		3)		**GA22/440-460VD,**
			.....		**GA15/380VD,**
			.....		**GA18/380VD,**
			.....		**GA22/380VD**
	1900 0523 18		4)		**GA15/220-230VD,**
			.....		**GA18/220-230VD**
	1900 0523 19		5)		**GA22/220-230VD**
	1900 0523 20		6)		**GA11/220-230VD**
	1900 0523 36		7)		**GA18/380VD SAA,**
			.....		**GA15/380VD SAA**
1	1202 8565 00	•	.....	1	Box
	1202 8567 00	•	7)	1	Box
2	1202 6209 00	•	.....	1	Cover
3	1202 7403 02	•	1)2)3)	1	Mounting panel
	1202 7403 03	•	4)5)	1	Mounting panel
	1202 7403 00	•	6)7)	1	Mounting panel
4	0090 1400 02	•	.....	AR	Rail
5	0160 6093 00	•	.....	4	Screw
6	0324 1132 00	•	.....	4	Spacer
7	1089 0506 30	•	.....	3	End bracket
8	9828 0241 05	•	.....	1	Label
9	0690 3401 41	•	.....	1	Data plate
10	1612 3814 00	•	.....	1	Bracket
11	1900 9999 02	•	.....	1	Slide
12	1612 3819 01	•	.....	1	Cable
13	1612 3818 01	•	.....	1	Cable
14	1612 3820 01	•	.....	1	Cable
-	1088 1301 02	•	.....	30	Cable ty
15	1615 4435 00	•	.....	1	Label
16	1089 9092 06	•	1)2)3).....	2	Fuse
17	1089 9083 11	•	1)2)3).....	2	Fuse holder
18	1089 9271 01	•	.....	1	Time relay
19	1089 9203 04	•	.....	1	Circuit breaker
20	1089 9136 13	•	.....	1	Transformer
21	1089 0362 08	•	.....	1	Push button
22	1091 0211 00	•	.....	1	Bulb
23	1089 0362 05	•	.....	1	Push button
24	1089 9051 01	•	.....	1	Toggle switch
25	1089 9142 16	•	.....	1	Hourmeter
26	1900 0020 07	•	.....	1	Regulator
-	1089 9276 01	••	.....	1	Shroud

Ref.	A	B	C	D	Designation
27	1089 0506 02	•	1)2)3)7).....	1	Terminal
28	1089 0506 10	•	.....	2	Terminal
29	1900 9999 01	•	.....	1	Junct. box
30	1089 9172 31	•	1)	1	Contactor
	1089 9172 35	•	2)	1	Contactor
	1089 9172 32	•	3)6)7)	1	Contactor
	1089 9172 33	•	4)5)	1	Contactor
31	1089 9172 32	•	1)	1	Contactor
	1089 9172 37	•	2)	1	Contactor
	1089 9172 33	•	3)6)7)	1	Contactor
	1089 9221 62	•	4)5)	1	Contactor
32	1089 9172 32	•	1)	1	Contactor
	1089 9172 37	•	2)	1	Contactor
	1089 9172 33	•	3)6)7)	1	Contactor
	1089 9221 62	•	4)5)	1	Contactor
33	1089 9169 31	•	1)	1	Overload relay
	1089 9169 32	•	2)	1	Overload relay
	1089 9169 46	•	3)6)7)	1	Overload relay
	1089 9169 54	•	4)	1	Overload relay
	1089 9169 55	•	5)	1	Overload relay
34	1089 0506 05	•	4)5)	3	Terminal
	1089 0506 07	•	1)	1	Terminal
	1089 0506 04	•	2)3)6)7).....	1	Terminal
35	1089 0506 32	•	.....	2	Terminal
36	1089 9203 03	•	4)5)6)7)	2	Circuit breaker
37	1089 0506 06	•	4)5)6)	12	Terminal
38	1089 0506 21	•	4)5)6)	5	End plate
39	1089 0388 01	•	7)	1	Fan
40	1089 0388 12	•	7)	1	Cable
41	1089 0388 11	•	7)	2	Filter
42	1089 0388 13	•	7)	2	Gasket
43	1089 9146 47	•	7)	1	Relay
44	1612 3818 00		.....	1	Cable
45	1612 3819 00		.....	1	Cable
46	1612 3820 00		.....	1	Cable
-	1088 1301 02		.....	15	Cable ty

1).....7) Refers to note on cubicle part number / Verwijst naar nota bij onderdeelnummer van kast / Hänvisar till not på skåpets reservdelsnsummer / Verweist auf die Note beim Teilnummer vom Kasten / Renvoie à la note avec le numéro de pièce de l'armoire / Remite a nota con número de parte del armario / Riferito alla nota sul N. Cat. dell'armadio

29_307_0_0_1

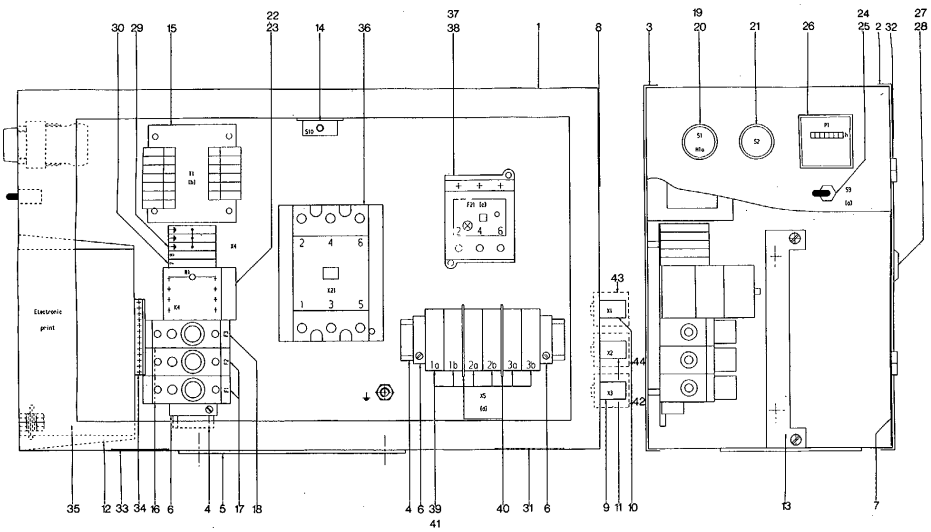
30 29 15 22 23 14 36 37 38 1 8 3 19 20 21 26 24 25 2 32 27 28
Electronic print
43
44
42
35 12 33 34 16 6 4 5 17 18 4 6 39 41 40 31 6 9 11 10 13 7

Cubicle with D.O.L. starter
Kast met D.O.L. starter
Skåp med D.O.L. startutrustning
Kasten mit D.O.L. Anlasser
Armoire avec démarreur D.O.L.
Armario con arrancador D.O.L.
Armadio elettrico con apparecchiatura per l'avviamento diretto dalla linea

Ref.	A	B	C	D	Designation
-				1	Cubicle
	1900 0532 02		1)		**GA11/440-460VD, GA11/575VD**
	1900 0532 04		2)		**GA15/440-460VD, GA15/575VD, GA18/575VD**
	1900 0532 06		3)		**GA11/220-230VD, GA18/440-460VD, GA22/440-460VD, GA22/575VD**
	1900 0532 08		4)		**GA15/220-230VD**
	1900 0532 10		5)		**GA18/220-230VD, GA22/220-230VD**
1	1202 8566 00	•		1	Box
2	1202 6210 00	•		1	Cover
3	1202 7403 04	•	1)2)	1	Mounting panel
	1202 7403 05	•	3)4)	1	Mounting panel
	1202 7403 06	•	5)	1	Mounting panel
4	0090 1400 02	•		AR	Rail
5	1088 0409 01	•		1	Flange
6	1089 0506 30	•		3	End bracket
	1089 0506 30	•	5)	1	End bracket
7	9828 0241 19	•		1	Label
8	1613 3046 00	•		1	Data plate
9	1612 3818 03	•		1	Cable
10	1612 3819 03	•		1	Cable
11	1612 3820 03	•		1	Cable
-	1088 1301 02	•		30	Cable ty
12	1900 9999 02	•		1	Slide
13	1612 3814 00	•		1	Bracket
14	1089 0304 04	•		1	Limit switch
15	1089 9136 26	•		1	Transformer
16	1089 9049 04	•		3	Fuse holder
17	1089 9168 32	•		2	Link
18	1089 9168 02	•		1	Fuse
19	1089 0362 08	•		1	Push button
20	1091 0211 00	•		1	Bulb
21	1089 0362 05	•		1	Push button
22	1089 9162 03	•		1	Thermistor
23	1089 9146 47	•		1	Relay
24	1089 9165 02	•		1	Toggle switch
25	1619 2371 00	•		1	Shroud

Ref.	A	B	C	D	Designation
26	1089 9142 16	•		1	Hourmeter
27	1619 7704 00	•		1	Lock
28	1089 9154 02	•		1	Key
29	1089 0506 09	•		3	Terminal
30	1089 0506 01	•		2	Terminal
31	1614 3559 00	•		1	Label
32	1613 3431 00	•		1	Label
33	1202 7981 00	•		1	Label
34	1900 9999 01	•		1	Junct.box
35	1900 0020 07	•		1	Regulator
-	1089 9276 01	••		1	Shroud
36	1089 9172 37	•	1)	1	Contactor
	1089 9172 33	•	2)	1	Contactor
	1089 9221 62	•	3)4)	1	Contactor
	1089 9221 65	•	5)	1	Contactor
37	1089 9169 32	•	1)	1	Overload relay
	1089 9169 46	•	2)	1	Overload relay
	1089 9169 54	•	3)	1	Overload relay
	1089 9169 56	•	4)	1	Overload relay
	1089 9205 12	•	5)	1	Overload relay
38	1089 9169 40	•	1)2)	1	Connector
	1089 9169 50	•	3)4)	1	Connector
39	1089 0506 03	•	1)2)	3	Terminal
	1089 0506 03	•	3)4)	6	Terminal
40	1089 0506 22	•		2	End plate
41	1089 0506 01	•	1)2)	3	Terminal
42	1612 3818 00			1	Cable
43	1612 3819 00			1	Cable
44	1612 3820 00			1	Cable
-	1088 1301 02			15	Cable ty

1)....5) Refers to note on cubicle part number /
Verwijst naar nota bij onderdeelnummer van kast /
Hänvisar till not på skåpets reservdelsnummer /
Verweist auf die Note beim Teilnummer vom Kasten /
Renvoie à la note avec le numéro de pièce de l'armoire /
Remite a nota con número de parte del armario /
Riferito alla nota sul N. Cat. dell'armadio

29_308_0_0_0

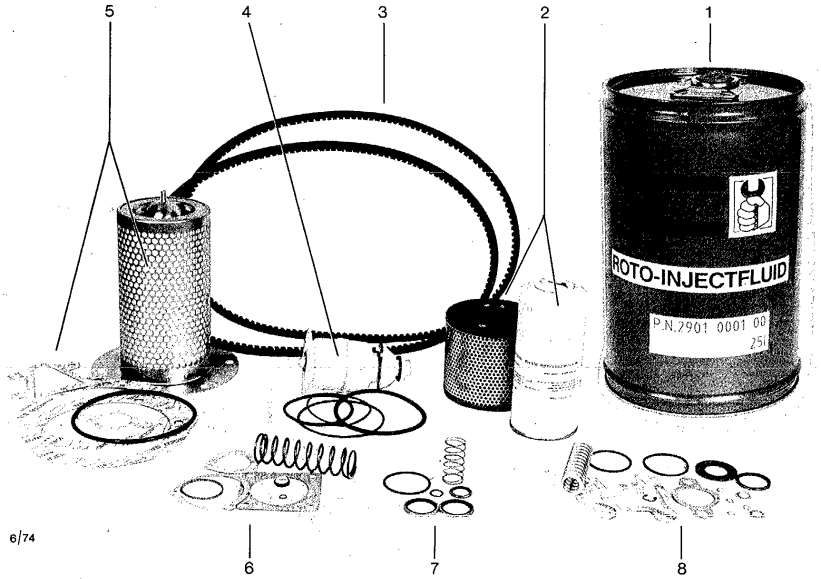
5
4
3
2
1
ROTO-INJECTFLUID
P.N.2901 0001 00
25L
6/74
6
7
8

Contents "Service kits"
Inhoud "Service kits"
Innehåll "Service kits"
Inhalt "Service kits"
Table des matières "Service kits"
Indice "Service kits"
Indice "Kit per la manutenzione"

Ref.	A	C	D
5	**Kit 2901 0003 00**		1
	Oil separator kit		
	1612 3869 00		1
	1202 7002 00		2
	1202 9973 00		1
	1202 7001 00		1
	0653 1046 00		4
	0663 7155 00		1
8	**Kit 2901 0005 00**		1
	Min. press. vlv. kit		
	0333 3220 00	1)	4
	0333 3237 00	1)	2
	0653 1046 00		4
	0663 7135 00	1)	1
	0663 9868 00		1
	1202 9973 00		1
	1613 3223 01	1)	1
	1202 7001 00		1
	1619 6928 00	1)	1
	1612 4048 00	1)	1
	1612 4049 00	1)	1
	0335 3111 00	1)	1
4	**Kit 2901 0007 00**		1
	Moisture trap kit		
	2900 1017 00	1)	1
	0663 7136 00		3
6	**Kit 2901 0012 00**		1
	Unloading valve kit		
	0663 7114 00	1)	1
	0665 9110 00	1)	1
	1202 6997 00	1)	1
	1202 6998 00	1)	1
	1202 6999 00		1
	1619 5471 00	1)	1
	0291 1108 00	1)	1
	0291 1110 00	1)	1
	1202 9891 00	1)	1

Ref.	A	C	D
	Kit 2901 0013 00		1
	Tension pulley kit		
	1202 6205 00		1
	0291 1114 00		1
	Kit 2901 0014 00		1
	Check valve kit		
	1613 5165 00		1
	0663 7138 00		1
	0663 9868 00		1
	0661 1033 00		1
	0333 3237 00		2
	Kit 2901 0015 00		1
	Vent valve kit		
7	**Kit 2901 0016 00**		1
	Oil stop valve kit		
	0661 1033 00	1)	1
	0661 1049 00	1)	2
	0663 3120 00		1
	0663 7135 00		1
	1613 2357 00	1)	1
3	**Kit 2901 0022 00**		1
	Belt kit GA11-15		
	1202 7228 01		2
3	**Kit 2901 0023 00**		1
	Belt kit GA18-22		
	1202 7228 02		2

1) Parts needed to overhaul the respective sub-assembly, all other parts of the kit to be used for mounting the sub-assembly into the unit /
Komponenten nodig voor de revisie van het respektievelijke onderdeel; alle andere komponenten van de kit gebruiken om het onderdeel in de groep te monteren /
Delar som behövs till ifrågavarande komponentens översyn; alla andra delar i "service kit" skall användas till montering av komponenten i aggregatet /
Komponenten nötig um die respektive Baueinheit zu überholen; alle anderen Komponenten vom "Service Kit" sind zu verwenden um die Baueinheit in die Gruppe einzubauen /
Pièces nécessaires pour la révision du composant respectif; utiliser toutes les autres pièces du kit pour la pose du composant dans le groupe /
Piezas necesarias para la revisión del subconjunto respectivo; utilizar todas las otras piezas del "kit" para montar el subconjunto en el grupo /
Parti necessarie per revisionare il rispettivo sotto-gruppo; tutte le altre parti del kit devono essere usate per montare il sotto-gruppo sull'unità

48_087_1_0_0

"Service Pak" Maintenance kits
"Service Pak" Onderhoudskits
"Service Pak" Underhållsutrustning
"Service Pak" Wartungssätze
"Service Pak" Kit d'entretien
Equipos de mantenimiento "Service Pak"
"Service Pak" Kit per la manutenzio

Ref.	A	D
2	**Kit 2901 0000 00**	1
	2,000 hr filter kit	
	1619 1269 00	1
	1613 6105 00	1
	1619 5819 00	1
1	**Kit 2901 0001 00**	1
	Oil kit	
	ROTO-INJECTFLUID	25l.
	Kit 2901 0008 00	1
	6,000 hr kit GA11-15	
	2901 0000 00	1
	2901 0003 00	1
	2901 0007 00	1
	2901 0022 00	1
	2901 0005 00	1
	Kit 2901 0010 00	1
	6,000 hr kit GA18-22	
	2901 0000 00	1
	2901 0003 00	1
	2901 0007 00	1
	2901 0023 00	1
	2901 0005 00	1
	Kit 2901 0017 00	1
	12,000 hr kit GA11-15	
	2901 0008 00	1
	2901 0012 00	1
	2901 0014 00	1
	2901 0015 00	1
	2901 0016 00	1
	Kit 2901 0019 00	1
	12,000 hr kit GA18-22	
	2901 0010 00	1
	2901 0012 00	1
	2901 0014 00	1
	2901 0015 00	1
	2901 0016 00	1

Bodywork
Karrosserie
Karosseri
Karosserie
Capotage
Carrocería
Cappottatura

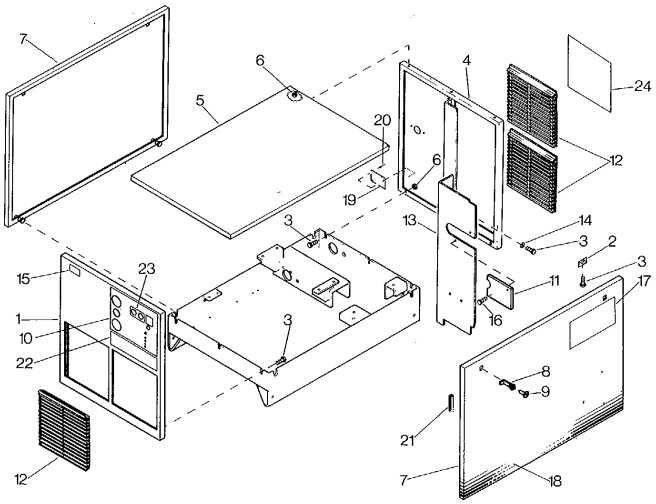

Ref.	A	B	C	D	Designation
1	1202 6186 00		1)	1	Panel
2	1202 6193 00			1	Bracket
3				AR	Bolt
	1079 1472 05				**M8x20**
	1619 2766 00				**M8x20**
4	1202 6187 00		1)	1	Panel
5	1612 3836 00		1)	1	Roof
6	1079 0298 01			13	Nut
7	1612 3837 00		1)	2	Door
8	1619 6989 00			4	Lock
9	1089 9068 01			2	Key
10	1079 9914 99			1	Label
11				1	Plate
	1612 4078 00				**WELDED RECEIVER**
	1202 9431 00				**CAST RECEIVER**
12	1612 3874 00			4	Grating
13			1)	1	Panel
	1202 6191 00				**WELDED RECEIVER**
	1202 9430 00				**CAST RECEIVER**
14	0300 8005 00			1	Washer
15	0690 1112 01			2	Decal
16	1619 5898 02			2	Bolt
17	0690 1125 01			2	Decal

Ref.	A	B	C	D	Designation
18	1612 3996 00			2	Decal
19				1	Data plate
	1614 4691 00				**50 Hz**
	1614 5933 00				**60 Hz**
20	0129 3103 00			4	Pop rivet
21	1619 2665 00			AR	Rubber strip
22				1	Cover
	1202 7062 01				**GA11**
	1202 7062 02				**GA15**
	1202 7062 03				**GA18**
	1202 7062 04				**GA22**
23	1079 9905 19			1	Label
24	1079 9905 09			1	Label

1) To be lined with foam plastic / Te bekleden met schuimrubber / Skall kläs med skumplast / Auskleiden mit Schaumgummi / A garnir avec du caoutchouc mousse / Revestir de goma espuma / Da rivestira con plastica espansa
0020 9010 01 (AR)

41_137_2_0_0