جهان کمپرسور
Jahan Compressor

KAESER COMPRESSORS®

Rotary Screw Compressors

SK Series

With the world-renowned SIGMA PROFILE

Flow rate 0.53 to 2.70 m³/min, Pressure 5.5 to 15 bar

www.kaeser.com

SK series

Long-term savings

Today's users expect maximum availability and efficiency from their compressors, regardless of size. It will therefore come as no surprise that KAESER's SK series rotary screw compressors go far beyond meeting these key expectations. Not only do they deliver more compressed air for less energy, but they also combine ease of use and maintenance-friendliness with exceptional versatility and environmentally responsible design.

More air for your money

KAESER's engineers have succeeded in significantly boosting the performance of the new SK series rotary screw compressors in comparison with previous models. This impressive feat has been achieved both through optimisation of the airend and minimisation of internal pressure losses.

Energy-saving performance

The efficiency of a machine depends on the total costs incurred throughout its entire service life. With compressors, energy costs account for the lion's share of total expenditure. KAESER therefore designed their SK series models with the highest possible levels of energy efficiency in mind. Refinements to the energy-saving SIGMA PROFILE rotors inside the airend and the use of Premium Efficiency IE3 motors have contributed significantly to the increased performance of these versatile compressors. The addition of the SIGMA CONTROL 2 internal controller and KAESER's unique cooling system have helped to push the boundaries of efficiency even further.

Optimised design

All SK series models share logical and user-friendly design throughout. For example, the left-hand enclosure panel can be removed in a few simple steps to allow excellent visibility of the system's intelligently laid-out components. Needless to say, the SK series was designed to ensure best possible access to all service points. When closed, the sound-absorbing compressor housing keeps operating noise to a minimum, thereby ensuring a pleasantly quiet working environment. Moreover, with its three intake openings, the enclosure provides separate air flows for highly efficient cooling of the system, drive motor and control cabinet. Last but not least, SK series compressors are impressively compact, which makes them the perfect choice for applications where space is at a premium.

Modular system concept

SK series compressors are available as standard versions, as versions equipped with an integrated refrigeration dryer and as AIRCENTER versions fitted atop an air receiver. KAESER's intelligent modular design principle therefore offers incredible flexibility. Moreover, all versions are available with an integrated frequency converter for infinitely variable speed control.

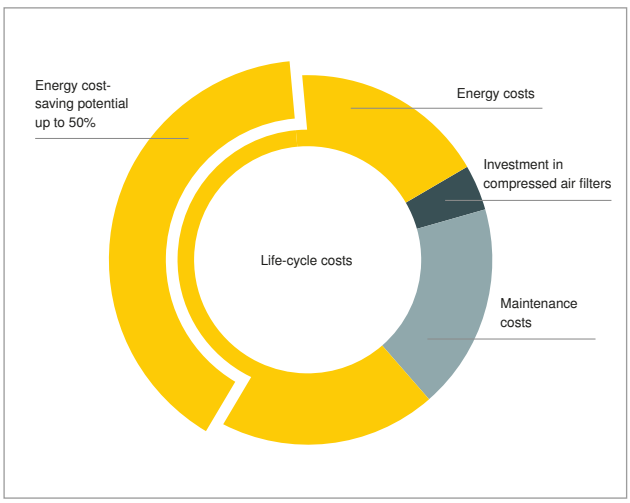

Energy-efficiency: the essential requirement

Initial investment and servicing costs account for only a small part of a compressor's total life-cycle costs. It is energy that accounts for the lion's share of those costs.

For more than 40 years, KAESER has been committed to minimising your energy costs for compressed air production. We also have the bigger picture in clear focus when it comes to servicing and maintenance costs, as well as maximum compressed air availability.

Quiet and powerful, durable and secure.

Image: SK 25

7.8bar
09:26
75°C
ON LOAD
Key
- on
pA
- Load
Run
18005h
Load
17105 h
1995 h
Maintenance inc
esc
www.kaeser.com
KAESER
RFID
SIGMA CONTROL 2
KAESER

SK series

Design is in the details

SIGMA PROFILE airend

At the heart of every SK system lies a premium-quality airend featuring the energy-saving SIGMA PROFILE. KAESER airends are equipped with flow-optimised rotors, which contribute significantly to the overall system's class-leading specific package input power.

SIGMA CONTROL 2 controller

The internal SIGMA CONTROL 2 controller ensures efficient compressor control and monitoring at all times. The large display and RFID reader provide effective communication and maximum security. Multiple interfaces offer exceptional flexibility, whilst the SD card slot makes updates quick and easy.

Maximum efficiency: IE3 motors

Needless to say, every KAESER SK series rotary screw compressor features an energy-saving, Premium Efficiency IE3 drive motor.

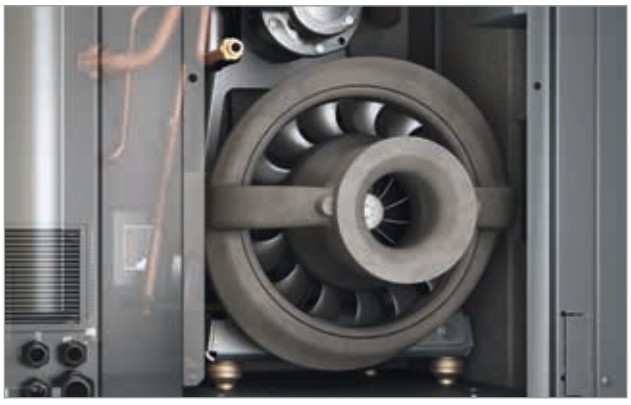

Efficient cooling

KAESER's innovative cooling system uses a highly efficient dual flow fan and separate airflow channels for cooling of the motor, fluid/compressed air cooler and control cabinet. This not only achieves optimum cooling performance, low compressed air discharge temperatures and minimal sound levels, but also ensures a more efficient compression.

SK T (SFC) series

Also available with refrigeration dryer and variable speed control

SK with energy-saving dryer

The compressed air refrigeration dryer is installed within a separate housing, in order to shield it from the heat emitted by the compressor and to increase operational reliability. An automatic shutdown function further enhances energy-efficient performance.

Variable speed control also available

Variable speed control can offer distinct advantages for particular applications, which is why this option is also available on SK series models. The frequency converter is integrated into the compressor system's control cabinet.

Even quieter than before

The new cooling system provides improved cooling performance with optimum levels of soundproofing. Normal conversation can take place right beside the running compressor.

Maintenance-friendly

All maintenance work can be carried out from one side of the unit. The left-hand housing panel is easily removed to allow excellent component accessibility.

Image: SK 22 T

Image: AIRCENTER 22

AIRCENTER

The compact and efficient complete compressed air station

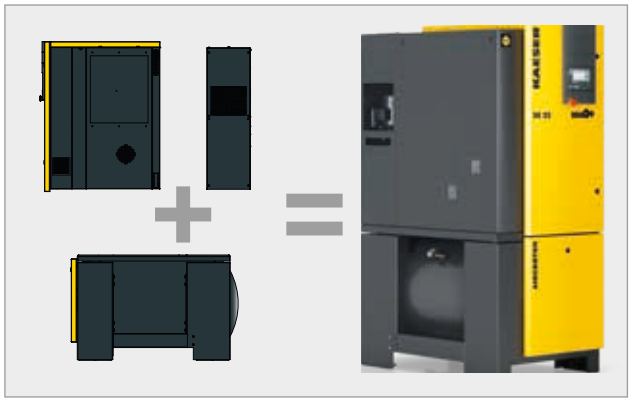

Connect and go

All that is needed to install this compact complete compressed air station is to connect it to a power supply and the compressed air network. No further installation work is necessary.

Durable air receiver

The 350-litre air receiver is especially designed for installation in AIRCENTER systems. All inner and outer surfaces are coated to provide excellent corrosion protection and ensure a long service life.

Service-friendly design

The left-hand housing panel is easily removed to allow excellent accessibility to all maintenance points. Sight glasses allow convenient inspection of fluid levels and drive belt tension whilst the unit is in operation.

Excellent component access

All maintenance and service components are easily accessible, which significantly reduces the downtime associated with service and maintenance tasks. This helps to increase compressed air availability and minimises operating costs.

KAESER
IE3
MOTOR
SK 25
SIGMA

Equipment

Complete system

Ready-to-run, fully automatic, super-silenced, vibration damped, all panels powder coated. Suitable for use in ambient temperatures up to +45 °C

Rotary screw airend

Genuine KAESER single-stage rotary screw airend with SIGMA PROFILE rotors and cooling fluid injection for optimised cooling

Electrical components

Ventilated IP 54 control cabinet, automatic star-delta starter, overload relay, control transformer

Cooling fluid and air flow

“Honeycomb” structure air intake filter, pneumatic inlet and venting valves, cooling fluid separator tank with triple separation system, safety valve, minimum pressure check valve, thermostatic valve and fluid filter within the cooling fluid circuit, fluid / compressed air combination cooler

Refrigeration dryer (with T version)

With electronically controlled condensate drain; refrigerant compressor with energy-saving, cycling shutdown feature; linked to operational status of the compressor when inactive. Alternatively, continuous operation can be selected at the user-end

Electric motor

Premium Efficiency IE3 electric motor, quality German manufacture, IP 55 protection

SIGMA CONTROL 2

“Traffic light” LED indicators show operating status at a glance; plain text display, 30 selectable languages, soft-touch keys with icons, fully automated monitoring and control. Selection of Dual, Quadro, Vario and Continuous control modes as standard. Interfaces: Ethernet; additional optional communication modules for: Profibus DP, Modbus, Profinet and DeviceNet. SD card slot for data-logging and updates; RFID reader, web server

Connection to centralised control systems available via optional communications modules for: Profibus DP, Modbus, Profinet and DeviceNet, web server

SIGMA AIR MANAGER 4.0

The refined adaptive 3-D^{advanced} Control predictively calculates and compares the various operating options and selects the most efficient one to suit the specific needs of the application.

On this basis, the SIGMA AIR MANAGER 4.0 constantly adjusts flow rates and compressor energy consumption in response to current compressed air demand. This optimisation is made possible by the integrated industrial PC with multi-core processor, in combination with the adaptive 3-D^{advanced} Control. Furthermore, the SIGMA NETWORK bus converter (SBC) provides a host of possibilities for enabling the system to be individually tailored to meet specific user requirements. The SBC can be equipped with digital and analogue input and output modules, as well as with SIGMA NETWORK ports, in order to enable seamless display of flow rate, pressure dew point, performance or alarm message information.

Amongst other key features, the SIGMA AIR MANAGER 4.0 provides long-term data storage capacity for reporting, controlling and audits, as well as for energy management tasks as per ISO 50001.

(See image on right; extract from the SIGMA AIR MANAGER 4.0 brochure)

Digital output device, e.g. laptop

Control centre

KAESER CONNECT

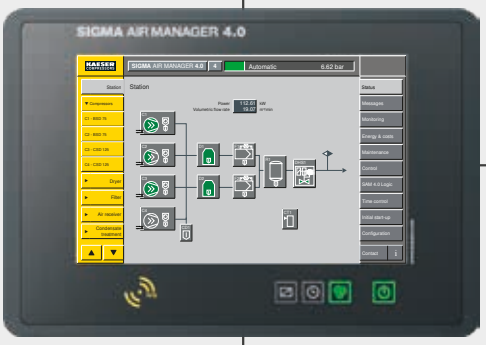

SIGMA AIR MANAGER 4.0

Communications module, e.g. Modbus TCP

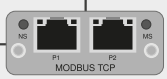

KAESER SIGMA NETWORK

SIGMA NETWORK
PROFIBUS master

Controller:
SIGMA CONTROL 2

Controller:
SIGMA CONTROL

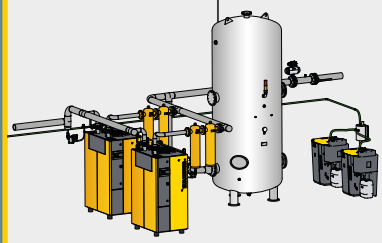

Various connection possibilities
for treatment components

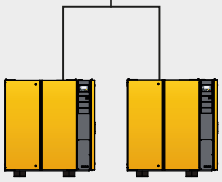

Connection of conventional
compressors possible

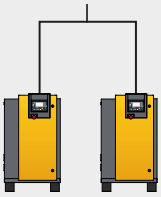

Connection of compressors
with SIGMA CONTROL 2

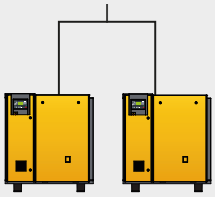

Connection of compressors with
SIGMA CONTROL; connection to stations
with Profibus network (SAM 1 alternative)

Secure data – secure business!

Technical specifications

Standard versions / SFC versions

Model	Gauge working pressure bar	Flow rate *) complete system at gauge working pressure m³/min	Max. gauge pressure bar	Drive motor rated power kW	Dimensions W x D x H mm	Compressed air connection	Sound pressure level **) dB(A)	Mass kg
SK 22	6 7.5 10 13	2.16 2.00 1.67 1.30	6 8 11 15	11	750 x 895 x 1260	G 1	66	312
SK 25	6 7.5 10 13	2.69 2.50 2.10 1.70	6 8 11 15	15	750 x 895 x 1260		67	320
SK 22 SFC	7.5 10 13	0.62 - 1.98 0.63 - 1.67 0.57 - 1.37	8 11 15	11	750 x 895 x 1260	G 1	67	329
SK 25 SFC	7.5 10 13	0.81 - 2.55 0.84 - 2.25 0.83 - 1.90	8 11 15	15	750 x 895 x 1260		68	337

T versions / T SFC versions

Model	Gauge working pressure bar	Flow rate *) complete system at gauge working pressure m³/min	Max. gauge pressure bar	Drive motor rated power kW	Refrigeration dryer model	Dimensions W x D x H mm	Compressed air connection	Sound pressure level **) dB(A)	Mass kg
SK 22 T	6 7.5 10 13	2.16 2.00 1.67 1.30	6 8 11 15	11	ABT 25	750 x 1240 x 1260	G 1	66	387
SK 25 T	6 7.5 10 13	2.69 2.50 2.10 1.70	6 8 11 15	15	ABT 25	750 x 1240 x 1260		67	395
SK 22 T SFC	7.5 10 13	0.62 - 1.98 0.63 - 1.67 0.57 - 1.37	8 11 15	11	ABT 25	750 x 1240 x 1260	G 1	67	404
SK 25 T SFC	7.5 10 13	0.81 - 2.55 0.84 - 2.25 0.83 - 1.90	8 11 15	15	ABT 25	750 x 1240 x 1260		68	412

Technical specifications for add-on refrigeration dryer

Model	Refrigeration dryer power consumption kW	Pressure dew point °C	Refrigerant	Refrigerant charge kg	Global warming potential GWP	CO_2 equivalent t	Hermetic refrigeration circuit
ABT 25	0.41	+3	R-513A	0.62	631	0.4	Yes

*) Flow rate, complete system as per ISO 1217: 2009 Annexe C/E: absolute inlet pressure 1 bar (a), cooling and air inlet temperature +20 °C
**) Sound pressure level as per ISO 2151 and basic standard ISO 9614-2, tolerance: ± 3 dB (A)

AIRCENTER standard versions / AIRCENTER SFC versions

Model	Gauge working pressure bar	Flow rate *) complete system at gauge working pressure m³/min	Max. gauge pressure bar	Drive motor rated power kW	Refrigeration dryer model	Air receiver volume l	Dimensions W x D x H mm	Compressed air connection	Sound pressure level **) dB(A)	Mass kg
AIRCENTER 22	6 7.5 10 13	2.16 2.00 1.67 1.30	6 8 11 15	11	ABT 25	350	750 x 1335 x 1880	G 1	66	579
AIRCENTER 25	6 7.5 10 13	2.69 2.50 2.10 1.70	6 8 11 15	15	ABT 25	350	750 x 1335 x 1880		67	587
AIRCENTER 22 SFC	7.5 10 13	0.62 - 1.98 0.63 - 1.67 0.57 - 1.37	8 11 15	11	ABT 25	350	750 x 1335 x 1880	G 1	67	596
AIRCENTER 25 SFC	7.5 10 13	0.81 - 2.55 0.84 - 2.25 0.83 - 1.90	8 11 15	15	ABT 25	350	750 x 1335 x 1880		68	604

How it works

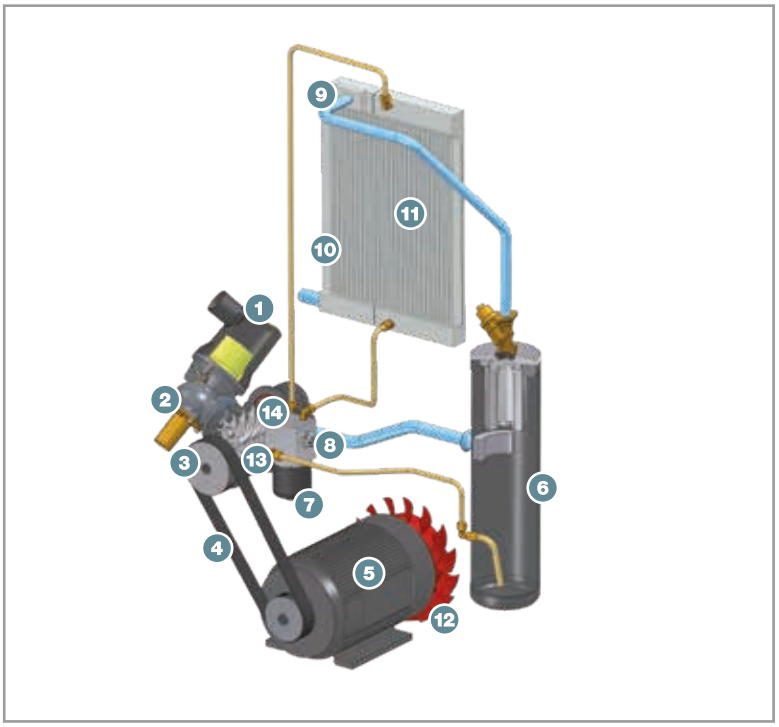

(1) Intake air filter
(2) Inlet valve
(3) Airend
(4) Belt drive
(5) IE3 drive motor
(6) Fluid separator tank
(7) Fluid separator cartridge
(8) Minimum pressure check valve
(9) Compressed air aftercooler
(10) Compressed air connection
(11) Fluid cooler
(12) Fan
(13) Fluid filter
(14) Thermostatic valve

The world is our home

As one of the world's largest manufacturers of compressors, blowers and compressed air systems, KAESER KOMPRESSOREN is represented throughout the world by a comprehensive network of branches, subsidiaries and authorised distribution partners in over 140 countries.

By offering innovative, efficient and reliable products and services, KAESER KOMPRESSOREN's experienced consultants and engineers work in close partnership with customers to enhance their competitive edge and to develop progressive system concepts that continuously push the boundaries of performance and technology. Moreover, decades of knowledge and expertise from this industry-leading systems provider are made available to each and every customer via the KAESER group's advanced global IT network.

These advantages, coupled with KAESER's worldwide service organisation, ensure that every product operates at peak performance at all times, whilst providing maximum availability.

LGA InterCert
Certified
QM/EM System
DIN EN ISO 9001:2015/
14001:2015

KAESER KOMPRESSOREN SE
P.O. Box 2143 – 96410 Coburg – GERMANY – Tel +49 9561 640-0 – Fax +49 9561 640-130
E-mail: productinfo@kaeser.com – www.kaeser.com

P-651/10ED Specifications subject to change without notice .18/20