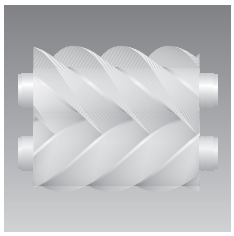

Atlas Copco Stationary Air Compressors

ZR/ZT 160-275 HV

Parts list

- Copyright 2013, Atlas Copco (I) Ltd.
  Any unauthorized use or copying of the contents or any part thereof is prohibited. This applies in particular to trademarks, model denominations, part numbers and drawings.
- **Use only authorized parts**. Any damage or malfunction caused by the use of unauthorized parts is not covered by Warranty or Product Liability.

- BOM downloaded date - 19 June 2013.
  This ASL is made as per BOM down load dated - 19 June 2013
  After this date if there is any change in BOM it will not reflect in this ASL.

No. 9096 5159 30

2013-08

www.atlascopco.com

جهان کمپرسور
Jahan Compressor

Atlas Copco

Contents

Gear casing 1
Compressor element 2
Gears 3

Mounts on gear casing

- ZR 4
- ZT 5

Compressor drive 6
Air inlet 7

Air flow

- HP Inlet - ZR 8
- HP Inlet - ZT 9
- HP Outlet - ZR 10
- HP Outlet - ZT 11
- LP Outlet - ZR 12
- LP Outlet - ZT 13

Air outlet

- ZT pack with aftercooler 14
- ZT connection air 15

Water system - ZR 16

Drain system

- ZR 17

Contents

- ZT 18

Coolers

- ZR 19
- ZT 20
- cooling system - ZT 21

Oil system

- ZR 22
- ZT 23

Drive arrangement 24

Regulation system

- ZR 25
- ZT 26

Bodywork

- Cubicle box 27
- ZR Inlet silencer 28
- ZR Baffles 29
- ZT Baffles 30
- ZR Doors & stays 31
- ZT Doors & stays 32

Electrical kit starter 33

Vci packing kit 34

1

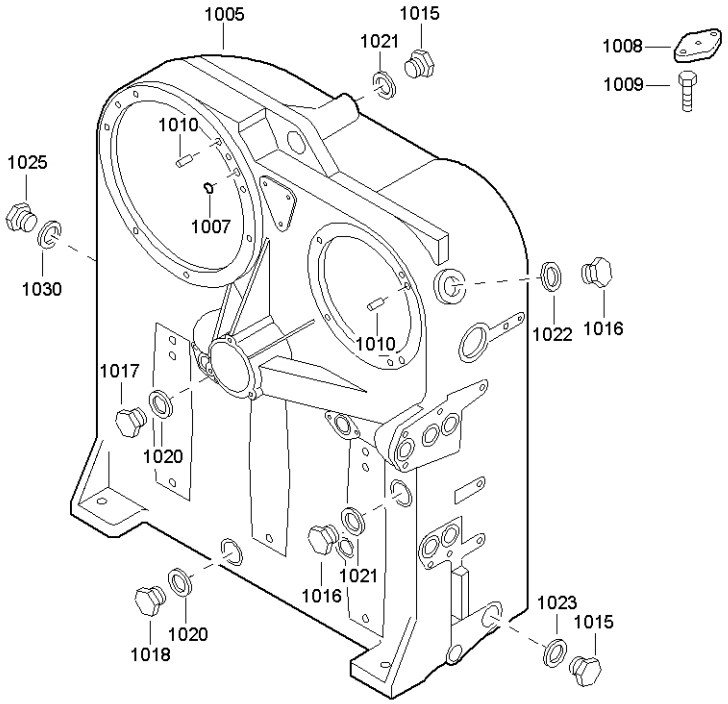
1005
1015
1021
1008
1009
1010
1025
1007
1030
1022
1016
1010
1017
1020
1021
1016
1023
1015
1020
1018

Gear casing

1

Ref.	Part number	Qty	Name	Remarks
			ZR160 7.5 bar(e) 190KW/ 3.3KV O	
			ZR160 7.5 bar(e) 190KW/ 6.6KV O	
			ZR160 7.5 bar(e) 200KW/ 3.3KV O	
			ZR160 7.5 bar(e) 200KW/ 6.6KV O	
			Gear Casing	
1005	1616 6425 03	1	Gear casing	
			ZR160 8.6 bar(e) 175KW/ 3.3KV O	
			ZR160 8.6 bar(e) 175KW/ 6.6KV O	
			ZR160 8.6 bar(e) 190KW/ 3.3KV O	
			ZR160 8.6 bar(e) 190KW/ 6.6KV O	
			Gear Casing	
1005	1616 6425 03	1	Gear casing	
			ZR160 10 bar(e) 165KW/ 3.3KV O	
			ZR160 10 bar(e) 165KW/ 6.6KV O	
			ZR160 10 bar(e) 175KW/ 3.3KV O	
			ZR160 10 bar(e) 175KW/ 6.6KV O	
			Gear Casing	
1005	1616 6425 03	1	Gear casing	
			ZR250 7.5 bar(e) 300KW/ 3.3KV O	
			ZR250 7.5 bar(e) 300KW/ 6.6KV O	
			ZR250 7.5 bar(e) 320KW/ 3.3KV O	
			ZR250 7.5 bar(e) 320KW/ 6.6KV O	
			Gear Casing	
1005	1616 6425 02	1	Gear casing	
			ZR250 8.6 bar(e) 280KW/ 3.3KV O	
			ZR250 8.6 bar(e) 280KW/ 6.6KV O	
			ZR250 8.6 bar(e) 300KW/ 3.3KV O	
			ZR250 8.6 bar(e) 300KW/ 6.6KV O	
			Gear Casing	
1005	1616 6425 02	1	Gear casing	
			ZR250 10 bar(e) 255KW/ 3.3KV O	
			ZR250 10 bar(e) 255KW/ 6.6KV O	
			ZR250 10 bar(e) 280KW/ 3.3KV O	
			ZR250 10 bar(e) 280KW/ 6.6KV O	
			Gear Casing	
1005	1616 6425 02	1	Gear casing	
			ZR275 7.5 bar(e) 320KW/ 3.3KV O	
			ZR275 7.5 bar(e) 320KW/ 6.6KV O	
			ZR275 7.5 bar(e) 345KW/ 3.3KV O	
			ZR275 7.5 bar(e) 345KW/ 6.6KV O	
			Gear Casing	
1005	1616 6425 04	1	Gear casing	
1007	0663 2107 81	1	O-Ring	
1008	1621 3505 00	2	Flange	
1009	0147 1323 00	2	Hex.bolt	
1010	0101 1953 00	2	Pin	
1015	0686 3716 09	2	Plug	
1016	0686 3716 09	2	Plug	
1017	0686 3716 09	1	Plug	
1018	0686 3716 09	1	Plug	
1020	0661 1000 31	2	Washer	
1021	0661 1000 31	2	Washer	
1022	0661 1000 31	1	Washer	
1023	0661 1000 31	1	Washer	
1025	0686 4230 07	1	Plug	
1030	9125 6303 00	1	Washer	
			ZT160 7.5 bar(e) 160KW,3.3KV S	
			ZT160 7.5 bar(e) 160KW,6.6KV S	
			ZT160 8.6 bar(e) 160KW,3.3KV S	
			ZT160 8.6 bar(e) 160KW,6.6KV S	
			ZT200 8.6 bar(e) 200KW,3.3KV S	
			Gear Casing	
1005	1616 6425 03	1	Gear casing	
			ZT160 10 bar(e) 160KW,3.3KV S	
			ZT160 10 bar(e) 160KW,6.6KV S	
			Gear Casing	
1005	1616 6425 03	1	Gear casing	
			ZT250 7.5 bar(e) 250KW,3.3KV S	
			ZT250 7.5 bar(e) 250KW,6.6KV S	
			ZT250 8.6 bar(e) 250KW,3.3KV S	
			ZT250 8.6 bar(e) 250KW,6.6KV S	
			Gear Casing	
1005	1616 6425 02	1	Gear casing	
			ZT250 10 bar(e) 250KW,3.3KV S	
			ZT250 10 bar(e) 250KW,6.6KV S	
			Gear Casing	
1005	1616 6425 02	1	Gear casing	
			ZT275 8.6 bar(e) 275KW,3.3KV S	
			ZT275 8.6 bar(e) 275KW,6.6KV S	
			Gear Casing	
1005	1616 6425 02	1	Gear casing	
			ZT275 10 bar(e) 275KW,3.3KV S	
			ZT275 10 bar(e) 275KW,6.6KV S	

1

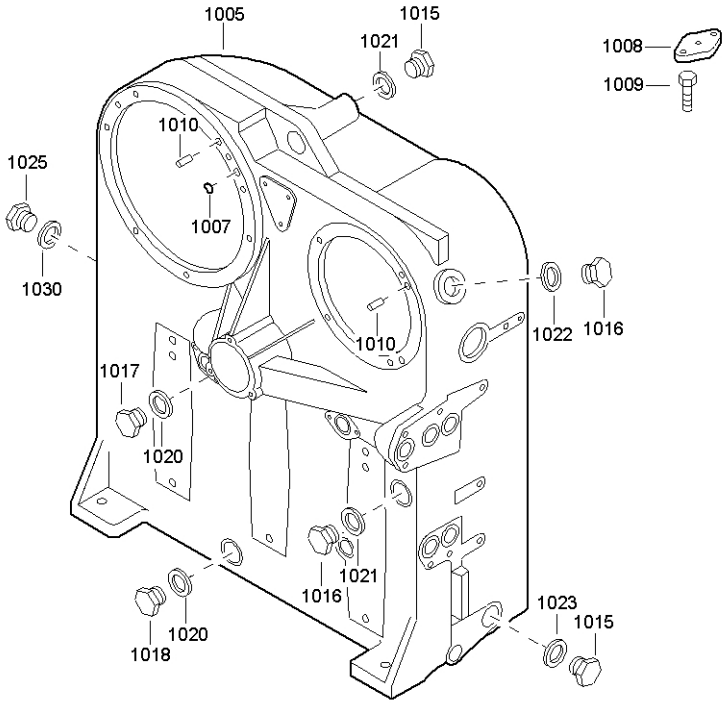
1005
1015
1021
1008
1009
1010
1025
1007
1030
1022
1016
1010
1017
1020
1021
1016
1020
1018
1023
1015

Gear casing

1

Ref.	Part number	Qty	Name	Remarks
			Gear Casing	
1005	1616 6425 02	1	Gear casing	
			ZR200 7.5 bar(e) 240KW/ 3.3KV O	
			ZR200 7.5 bar(e) 240KW/ 6.6KV O	
			ZR200 7.5 bar(e) 255KW/ 3.3KV O	
			ZR200 7.5 bar(e) 255KW/ 6.6KV O	
			Gear Casing	
1005	1616 6425 01	1	Gear casing	
			ZR200 10 bar(e) 200KW/ 3.3KV O	
			ZR200 10 bar(e) 200KW/ 6.6KV O	
			ZR200 10 bar(e) 220KW/ 3.3KV O	
			ZR200 10 bar(e) 220KW/ 6.6KV O	
			Gear Casing	
1005	1616 6425 01	1	Gear casing	
			ZR200 8.6 bar(e) 220KW/ 3.3KV O	
			ZR200 8.6 bar(e) 220KW/ 6.6KV O	
			ZR200 8.6 bar(e) 240KW/ 3.3KV O	
			ZR200 8.6 bar(e) 240KW/ 6.6KV O	
			Gear Casing	
1005	1616 6425 01	1	Gear casing	
			ZT200 7.5 bar(e) 200KW,3.3KV S	
			ZT200 7.5 bar(e) 200KW,6.6KV S	
			ZT200 8.6 bar(e) 200KW,6.6KV S	
			Gear Casing	
1005	1616 6425 01	1	Gear casing	
			ZT 200 10 bar(e) 200KW,3.3KV S	
			ZT200 10 bar(e) 200KW,6.6KV S	
			Gear Casing	
1005	1616 6425 01	1	Gear casing	
			ZT275 7.5 bar(e) 275KW,3.3KV S	
			ZT 275 7.5 bar(e) 275KW,6.6KV S	
			Gear Casing	
1005	1616 6425 04	1	Gear casing	
1010	0101 1951 50	2	Pin	
1015	0686 3716 09	2	Plug	
1016	0686 3716 09	2	Plug	
1017	0686 3716 09	1	Plug	
1018	0686 3716 09	1	Plug	
1020	0661 1000 31	2	Washer	
1021	0661 1000 31	2	Washer	
1022	0661 1000 31	1	Washer	
1023	0661 1000 31	1	Washer	
1025	0686 4230 07	1	Plug	
1030	9125 6303 00	1	Washer	

2

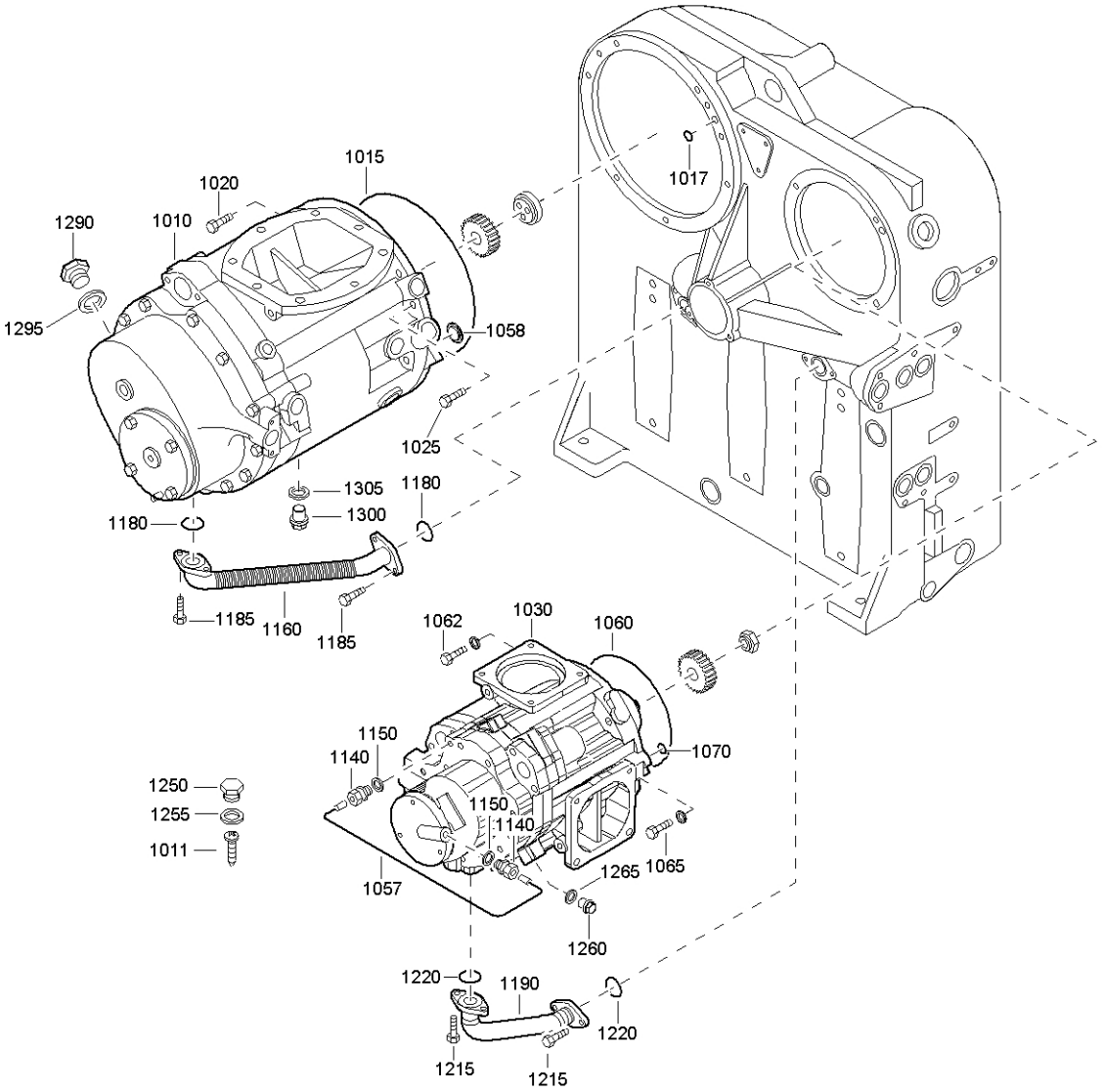
1015
1020
1017
1290
1010
1295
1058
1025
1305
1180
1300
1180
1185
1160
1185
1062
1030
1060
1150
1140
1070
1250
1255
1011
1150
1140
1265
1065
1057
1260
1220
1190
1220
1215
1215

Compressor element

2

Ref.	Part number	Qty	Name	Remarks
1010	1616 5904 81	1	O.f.s.	
1015	0663 2103 24	1	O-Ring	
1017	0663 2107 89	1	O-Ring	
1020	0147 1402 03	3	Hex. head screw	
1025	0147 1962 34	4	Hex.bolt	
1030	1616 7472 81	1	O.f.s.	
1057	1621 0387 00	1	Pipe	
1058	1621 0386 00	2	Seal disc	
1060	0663 2103 20	1	O-Ring	
1062	0147 1408 00	2	Hex.bolt	
1065	0147 1402 03	2	Hex. head screw	
1070	0663 2107 89	1	O-Ring	
1140	0580 0400 03	2	Straight coupling	
1150	0661 1000 25	2	Seal washer	
1160	1621 6561 00	1	Hose assembly	
1180	0663 2107 81	2	O-Ring	
1185	0147 1323 00	4	Hex.bolt	
1190	1621 2012 00	1	Hose assembly	
1215	0147 1323 00	4	Hex.bolt	
1220	0663 2107 81	2	O-Ring	
1250	0686 3716 07	1	Plug	
1255	0661 1000 30	1	Seal washer	
1260	0686 3716 04	2	Plug	
1265	0661 1000 25	2	Seal washer	
1290	0686 3716 07	1	Plug	
1295	0661 1000 30	1	Seal washer	
1300	0686 3716 04	2	Plug	
1305	0661 1000 25	2	Seal washer	
			ZT160 7.5 bar(e)	
			160KW,3.3KV S	
			ZT160 7.5 bar(e)	
			160KW,6.6KV S	
			ZT160 8.6 bar(e)	
			160KW,3.3KV S	
			ZT160 8.6 bar(e)	
			160KW,6.6KV S	
			ZT160 10 bar(e)	
			160KW,3.3KV S	
			ZT160 10 bar(e)	
			160KW,6.6KV S	

Ref.	Part number	Qty	Name	Remarks
			ZT200 7.5 bar(e)	
			200KW,3.3KV S	
			ZT200 7.5 bar(e)	
			200KW,6.6KV S	
			ZT200 8.6 bar(e)	
			200KW,3.3KV S	
			ZT200 8.6 bar(e)	
			200KW,6.6KV S	
			ZT 200 10 bar(e)	
			200KW,3.3KV S	
			ZT200 10 bar(e)	
			200KW,6.6KV S	
			ZT250 7.5 bar(e)	
			250KW,3.3KV S	
			ZT250 7.5 bar(e)	
			250KW,6.6KV S	
			ZT250 8.6 bar(e)	
			250KW,3.3KV S	
			ZT250 8.6 bar(e)	
			250KW,6.6KV S	
			ZT250 10 bar(e)	
			250KW,3.3KV S	
			ZT250 10 bar(e)	
			250KW,6.6KV S	
			ZT275 7.5 bar(e)	
			275KW,3.3KV S	
			ZT 275 7.5 bar(e)	
			275KW,6.6KV S	
			ZT275 8.6 bar(e)	
			275KW,3.3KV S	
			ZT275 8.6 bar(e)	
			275KW,6.6KV S	
			ZT275 10 bar(e)	
			275KW,3.3KV S	
			ZT275 10 bar(e)	
			275KW,6.6KV S	
2010	0244 4184 00	4	Round head drive screw	

3

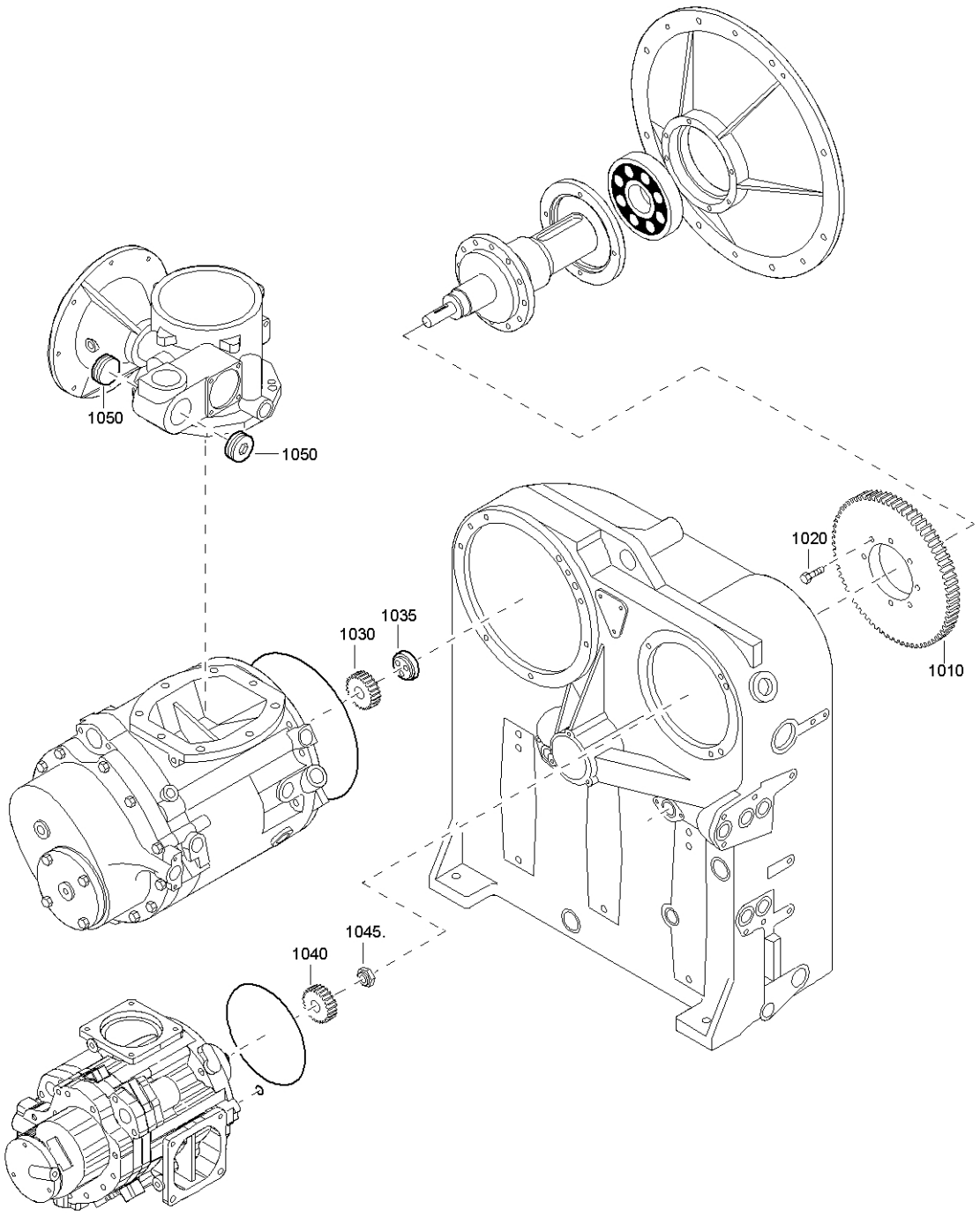

Gears

3

Ref.	Part number	Qty	Name	Remarks
			ZR160 7.5 bar(e) 190KW/ 3.3KV O	
			ZR160 7.5 bar(e) 190KW/ 6.6KV O	
			ZR160 7.5 bar(e) 200KW/ 3.3KV O	
			ZR160 7.5 bar(e) 200KW/ 6.6KV O	
1010	1616 6206 13	1	Gear wheel	
1020	0211 1402 00	12	Cap screw	
1030	1616 6207 12	1	Gear wheel	
1035	1616 6275 00	1	Washer	
1040	1616 6208 02	1	Gear wheel	
1050	1621 3608 00	2	Hex.nipple	
			ZR160 8.6 bar(e) 175KW/ 3.3KV O	
			ZR160 8.6 bar(e) 175KW/ 6.6KV O	
			ZR160 8.6 bar(e) 190KW/ 3.3KV O	
			ZR160 8.6 bar(e) 190KW/ 6.6KV O	
1010	1616 6206 06	1	Gear wheel	
1020	0211 1402 00	12	Cap screw	
1030	1616 6207 16	1	Gear wheel	
1035	1616 6275 00	1	Washer	
1040	1616 6208 15	1	Gear wheel	
1050	1621 3608 00	2	Hex.nipple	
			ZR160 10 bar(e) 165KW/ 3.3KV O	
			ZR160 10 bar(e) 165KW/ 6.6KV O	
			ZR160 10 bar(e) 175KW/ 3.3KV O	
			ZR160 10 bar(e) 175KW/ 6.6KV O	
1010	1616 6206 04	1	Gear wheel	
1020	0211 1402 00	12	Cap screw	
1030	1616 6207 07	1	Gear wheel	
1035	1616 6275 00	1	Washer	
1040	1616 6208 05	1	Gear wheel	
1050	1621 3608 00	2	Hex.nipple	
			ZR200 7.5 bar(e) 240KW/ 3.3KV O	
			ZR200 7.5 bar(e) 240KW/ 6.6KV O	
			ZR200 7.5 bar(e) 255KW/ 3.3KV O	
			ZR200 7.5 bar(e) 255KW/ 6.6KV O	
1010	1616 6206 10	1	Gear wheel	
1020	0211 1402 00	12	Cap screw	
1030	1616 6207 11	1	Gear wheel	
1040	1616 6208 09	1	Gear wheel	
1050	0686 3115 46	2	Plug	
			ZR200 8.6 bar(e) 220KW/ 3.3KV O	
			ZR200 8.6 bar(e) 220KW/ 6.6KV O	
			ZR200 8.6 bar(e) 240KW/ 3.3KV O	
			ZR200 8.6 bar(e) 240KW/ 6.6KV O	
1010	1616 6206 16	1	Gear wheel	
1020	0211 1402 00	12	Cap screw	
1030	1616 6207 15	1	Gear wheel	
1040	1616 6208 10	1	Gear wheel	
1050	0686 3115 46	2	Plug	
			ZR200 10 bar(e) 200KW/ 3.3KV O	
			ZR200 10 bar(e) 200KW/ 6.6KV O	
			ZR200 10 bar(e) 220KW/ 3.3KV O	
			ZR200 10 bar(e) 220KW/ 6.6KV O	
1010	1616 6206 08	1	Gear wheel	
1020	0211 1402 00	12	Cap screw	
1030	1616 6207 04	1	Gear wheel	
1040	1616 6208 02	1	Gear wheel	
1050	0686 3115 46	2	Plug	
			ZR250 7.5 bar(e) 300KW/ 3.3KV O	
			ZR250 7.5 bar(e) 300KW/ 6.6KV O	
			ZR250 7.5 bar(e) 320KW/ 3.3KV O	
			ZR250 7.5 bar(e) 320KW/ 6.6KV O	
1010	1616 6206 12	1	Gear wheel	
1020	0211 1402 00	12	Cap screw	
1030	1616 6221 01	1	Gear wheel	
1035	1616 6275 00	1	Washer	
1040	1616 6220 01	1	Gear wheel	
1045	1616 6274 00	1	Washer	
1050	1621 3608 00	2	Hex.nipple	
			ZR250 8.6 bar(e) 280KW/ 3.3KV O	
			ZR250 8.6 bar(e) 280KW/ 6.6KV O	
			ZR250 8.6 bar(e) 300KW/ 3.3KV O	
			ZR250 8.6 bar(e) 300KW/ 6.6KV O	
1010	1616 6206 11	1	Gear wheel	
1020	0211 1402 00	12	Cap screw	
1030	1616 6221 02	1	Gear wheel	
1035	1616 6275 00	1	Washer	
1040	1616 6220 02	1	Gear wheel	
1045	1616 6274 00	1	Washer	
1050	1621 3608 00	2	Hex.nipple	
			ZR250 10 bar(e) 255KW/ 3.3KV O	
			ZR250 10 bar(e) 255KW/ 6.6KV O	
			ZR250 10 bar(e) 280KW/ 3.3KV O	
			ZR250 10 bar(e) 280KW/ 6.6KV O	
1010	1616 6206 10	1	Gear wheel	
1020	0211 1402 00	12	Cap screw	
1030	1616 6207 01	1	Gear wheel	

3

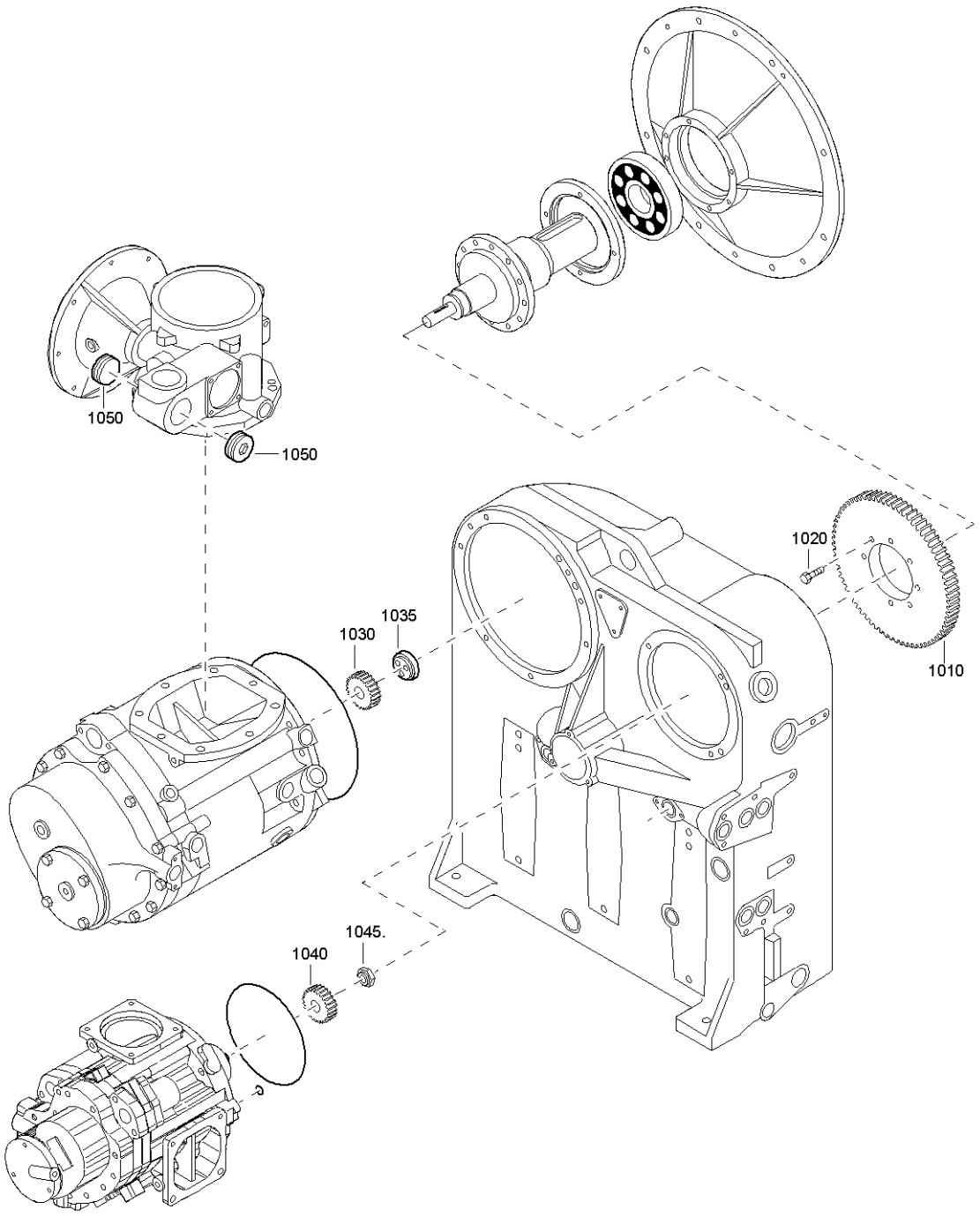

Gears

3

Ref.	Part number	Qty	Name	Remarks
1035	1616 6275 00	1	Washer	
1040	1616 6208 01	1	Gear wheel	
1050	1621 3608 00	2	Hex.nipple	
			ZR275 7.5 bar(e) 320KW/	
			3.3KV O	
			ZR275 7.5 bar(e) 320KW/	
			6.6KV O	
			ZR275 7.5 bar(e) 345KW/	
			3.3KV O	
			ZR275 7.5 bar(e) 345KW/	
			6.6KV O	
1010	1616 6206 03	1	Bull gear	
1020	0211 1402 00	12	Cap screw	
1030	1616 6207 14	1	Pinion lp stage	
1035	1616 6275 00	1	Washer	
1040	1616 6208 12	1	Pinion hp stage	
1050	1621 3608 00	2	Hex.nipple	
			ZT160 7.5 bar(e)	
			160KW,3.3KV S	
			ZT160 7.5 bar(e)	
			160KW,6.6KV S	
1010	1616 6206 13	1	Gear wheel	
1020	0211 1402 00	12	Cap screw	
1030	1616 6207 12	1	Gear wheel	
1040	1616 6208 02	1	Gear wheel	
1050	1621 3608 00	2	Hex.nipple	
			ZT160 8.6 bar(e)	
			160KW,3.3KV S	
			ZT200 8.6 bar(e)	
			200KW,3.3KV S	
			ZT160 8.6 bar(e)	
			160KW,6.6KV S	
1010	1616 6206 06	1	Gear wheel	
1020	0211 1402 00	12	Cap screw	
1030	1616 6207 16	1	Gear wheel	
1040	1616 6208 15	1	Gear wheel	
1050	1621 3608 00	2	Hex.nipple	
			ZT160 10 bar(e)	
			160KW,3.3KV S	
			ZT160 10 bar(e)	
			160KW,6.6KV S	
1010	1616 6206 04	1	Gear wheel	
1020	0211 1402 00	12	Cap screw	
1030	1616 6207 07	1	Gear wheel	
1040	1616 6208 05	1	Gear wheel	
1050	1621 3608 00	2	Hex.nipple	
			ZT200 7.5 bar(e)	
			200KW,3.3KV S	
			ZT200 7.5 bar(e)	
			200KW,6.6KV S	
1010	1616 6206 09	1	Gear wheel	
1020	0211 1402 00	12	Cap screw	
1030	1616 6207 02	1	Gear wheel	
1040	1616 6208 01	1	Gear wheel	
1050	1621 3608 00	2	Hex.nipple	
			ZT200 8.6 bar(e)	
			200KW,6.6KV S	
1010	1616 6206 15	1	Gear wheel	
1020	0211 1402 00	12	Cap screw	
1030	1616 6207 03	1	Gear wheel	
1040	1616 6208 11	1	Gear wheel	
1050	1621 3608 00	2	Hex.nipple	
			ZT 200 10 bar(e)	
			200KW,3.3KV S	
			ZT200 10 bar(e)	
			200KW,6.6KV S	
1010	1616 6206 08	1	Gear wheel	
1020	0211 1402 00	12	Cap screw	
1030	1616 6207 04	1	Gear wheel	
1040	1616 6208 02	1	Gear wheel	
1050	1621 3608 00	2	Hex.nipple	
			ZT250 7.5 bar(e)	
			250KW,3.3KV S	
			ZT250 7.5 bar(e)	
			250KW,6.6KV S	
1010	1616 6206 12	1	Gear wheel	
1020	0211 1402 00	12	Cap screw	
1030	1616 6221 01	1	Gear wheel	
1040	1616 6220 01	1	Gear wheel	
1050	1621 3608 00	2	Hex.nipple	
			ZT250 8.6 bar(e)	
			250KW,3.3KV S	
			ZT250 8.6 bar(e)	
			250KW,6.6KV S	
1010	1616 6206 11	1	Gear wheel	
1020	0211 1402 00	12	Cap screw	
1030	1616 6221 02	1	Gear wheel	
1040	1616 6220 02	1	Gear wheel	
1050	1621 3608 00	2	Hex.nipple	
			ZT250 10 bar(e)	
			250KW,3.3KV S	
			ZT250 10 bar(e)	
			250KW,6.6KV S	
1010	1616 6206 10	1	Gear wheel	
1020	0211 1402 00	12	Cap screw	
1030	1616 6207 01	1	Gear wheel	
1040	1616 6208 01	1	Gear wheel	
1050	1621 3608 00	2	Hex.nipple	
			ZT275 7.5 bar(e)	
			275KW,3.3KV S	
			ZT 275 7.5 bar(e)	
			275KW,6.6KV S	
1010	1616 6206 03	1	Bull gear	
1020	0211 1402 00	12	Cap screw	
1030	1616 6207 14	1	Pinion lp stage	
1040	1616 6208 12	1	Pinion hp stage	
1050	1621 3608 00	2	Hex.nipple	
			ZT275 8.6 bar(e)	
			275KW,3.3KV S	
			ZT275 8.6 bar(e)	
			275KW,6.6KV S	
1010	1616 6206 12	1	Gear wheel	
1020	0211 1402 00	12	Cap screw	
1030	1616 6221 01	1	Gear wheel	
1035	1616 6275 00	1	Washer	
1040	1616 6220 01	1	Gear wheel	
1045	1616 6274 00	1	Washer	
1050	1621 3608 00	2	Hex.nipple	
			ZT275 10 bar(e)	
			275KW,3.3KV S	
			ZT275 10 bar(e)	
			275KW,6.6KV S	
1010	1616 6206 11	1	Gear wheel	
1020	0211 1402 00	12	Cap screw	
1030	1616 6221 02	1	Gear wheel	
1040	1616 6220 02	1	Gear wheel	
1050	1621 3608 00	2	Hex.nipple	

4

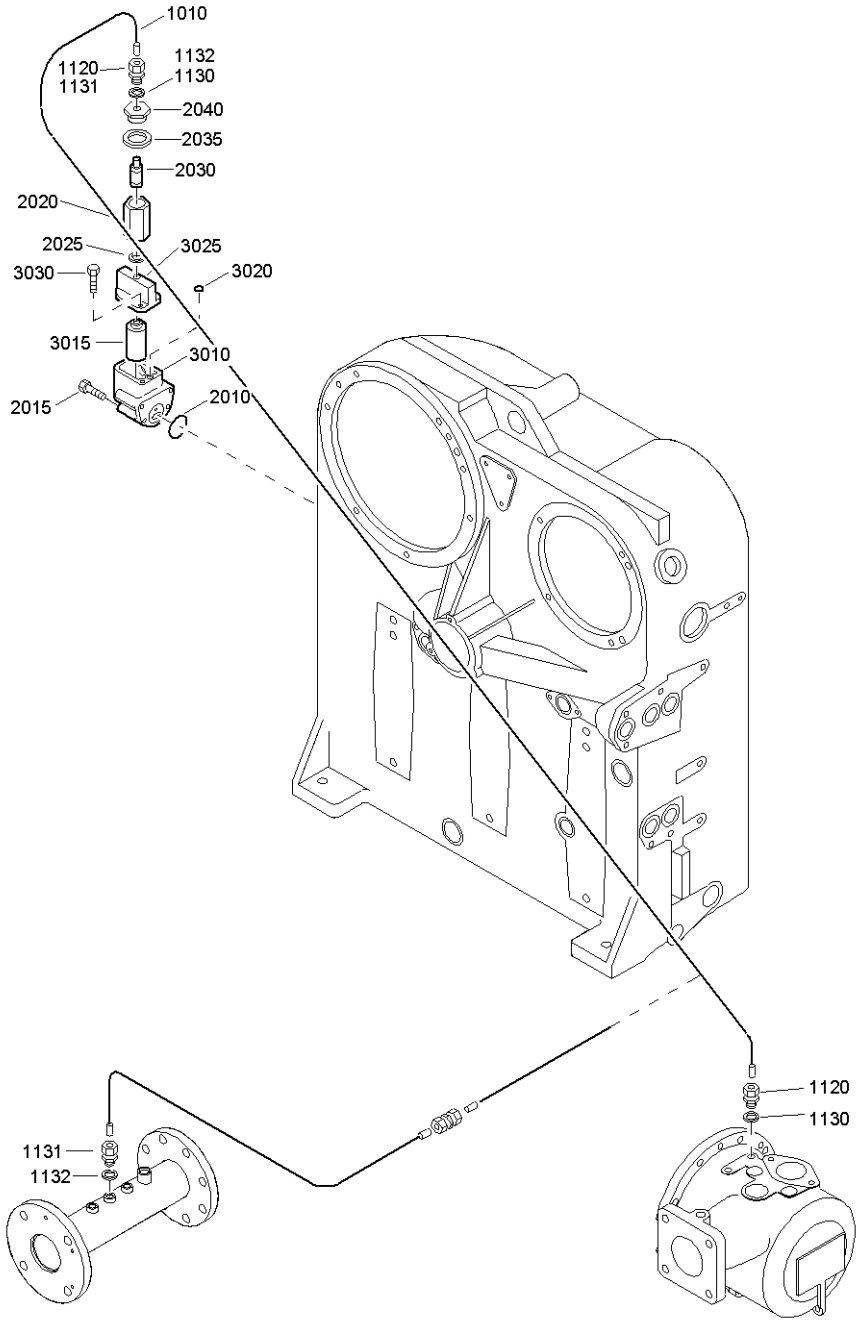
1010
1120
1131
1132
1130
2040
2035
2030
2020
2025
3025
3030
3020
3015
3010
2015
2010
1120
1130
1131
1132

Mounts on gearcasing - ZR

4

Ref.	Part number	Qty	Name	Remarks
			ZR160 7.5 bar(e) 190KW/ 3.3KV O	
			ZR160 7.5 bar(e) 190KW/ 6.6KV O	
			ZR160 7.5 bar(e) 200KW/ 3.3KV O	
			ZR160 7.5 bar(e) 200KW/ 6.6KV O	
			ZR160 8.6 bar(e) 175KW/ 3.3KV O	
			ZR160 8.6 bar(e) 175KW/ 6.6KV O	
			ZR160 8.6 bar(e) 190KW/ 3.3KV O	
			ZR160 8.6 bar(e) 190KW/ 6.6KV O	
			ZR160 10 bar(e) 165KW/ 3.3KV O	
			ZR160 10 bar(e) 165KW/ 6.6KV O	
			ZR160 10 bar(e) 175KW/ 3.3KV O	
			ZR160 10 bar(e) 175KW/ 6.6KV O	
			ZR250 7.5 bar(e) 300KW/ 3.3KV O	
			ZR250 7.5 bar(e) 300KW/ 6.6KV O	
			ZR250 7.5 bar(e) 320KW/ 3.3KV O	
			ZR250 7.5 bar(e) 320KW/ 6.6KV O	
			ZR250 8.6 bar(e) 280KW/ 3.3KV O	
			ZR250 8.6 bar(e) 280KW/ 6.6KV O	
			ZR250 8.6 bar(e) 300KW/ 3.3KV O	
			ZR250 8.6 bar(e) 300KW/ 6.6KV O	
			ZR250 10 bar(e) 255KW/ 3.3KV O	
			ZR250 10 bar(e) 255KW/ 6.6KV O	
			ZR250 10 bar(e) 280KW/ 3.3KV O	
			ZR250 10 bar(e) 280KW/ 6.6KV O	
			ZR275 7.5 bar(e) 320KW/ 3.3KV O	
			ZR275 7.5 bar(e) 320KW/ 6.6KV O	
			ZR275 7.5 bar(e) 345KW/ 3.3KV O	
			ZR275 7.5 bar(e) 345KW/ 6.6KV O	
1010	1621 3957 00	1	Pipe	
1120	0580 0013 32	2	Connector	
1130	0661 1000 25	2	Seal washer	
1131	0580 0013 32	2	Connector	
1132	0661 1000 25	2	Seal washer	
2010	0663 2107 81	1	O-Ring	
2015	0211 1335 03	4	Hex.socket cap screw	
2020	1614 8671 00	1	Housing	
2025	0661 1000 25	1	Seal washer	
2030	1624 1633 09	1	Filter element	
2035	0661 1000 30	1	Seal washer	
2040	1614 8672 00	1	Plug	
3010	1621 1865 00	1	Housing	
3015	1623 5071 00	1	Filter	
3020	0663 2107 84	1	O-Ring	
3025	1614 8222 00	1	Cover	
3030	0211 1247 03	2	Hex sock. Screw	
			ZR200 7.5 bar(e) 240KW/ 3.3KV O	
			ZR200 7.5 bar(e) 240KW/ 6.6KV O	
			ZR200 7.5 bar(e) 255KW/ 3.3KV O	
			ZR200 7.5 bar(e) 255KW/ 6.6KV O	
			ZR200 8.6 bar(e) 220KW/ 3.3KV O	
			ZR200 8.6 bar(e) 220KW/ 6.6KV O	
			ZR200 8.6 bar(e) 240KW/ 3.3KV O	
			ZR200 8.6 bar(e) 240KW/ 6.6KV O	
			ZR200 10 bar(e) 200KW/ 3.3KV O	
			ZR200 10 bar(e) 200KW/ 6.6KV O	
			ZR200 10 bar(e) 220KW/ 3.3KV O	
			ZR200 10 bar(e) 220KW/ 6.6KV O	
1010	1621 3957 00	1	Pipe	
1120	0580 0013 32	2	Connector	
1130	0661 1000 25	2	Seal washer	
2010	0663 2107 81	1	O-Ring	
2015	0211 1335 03	4	Hex.socket cap screw	
2020	1614 8671 00	1	Housing	
2025	0661 1000 25	1	Seal washer	
2030	1624 1633 09	1	Filter element	
2035	0661 1000 30	1	Seal washer	
2040	1614 8672 00	1	Plug	
3010	1621 1865 00	1	Housing	
3015	1623 5071 00	1	Filter	
3020	0663 2107 84	1	O-Ring	
3025	1614 8222 00	1	Cover	
3030	0211 1247 03	2	Hex sock. screw	

5

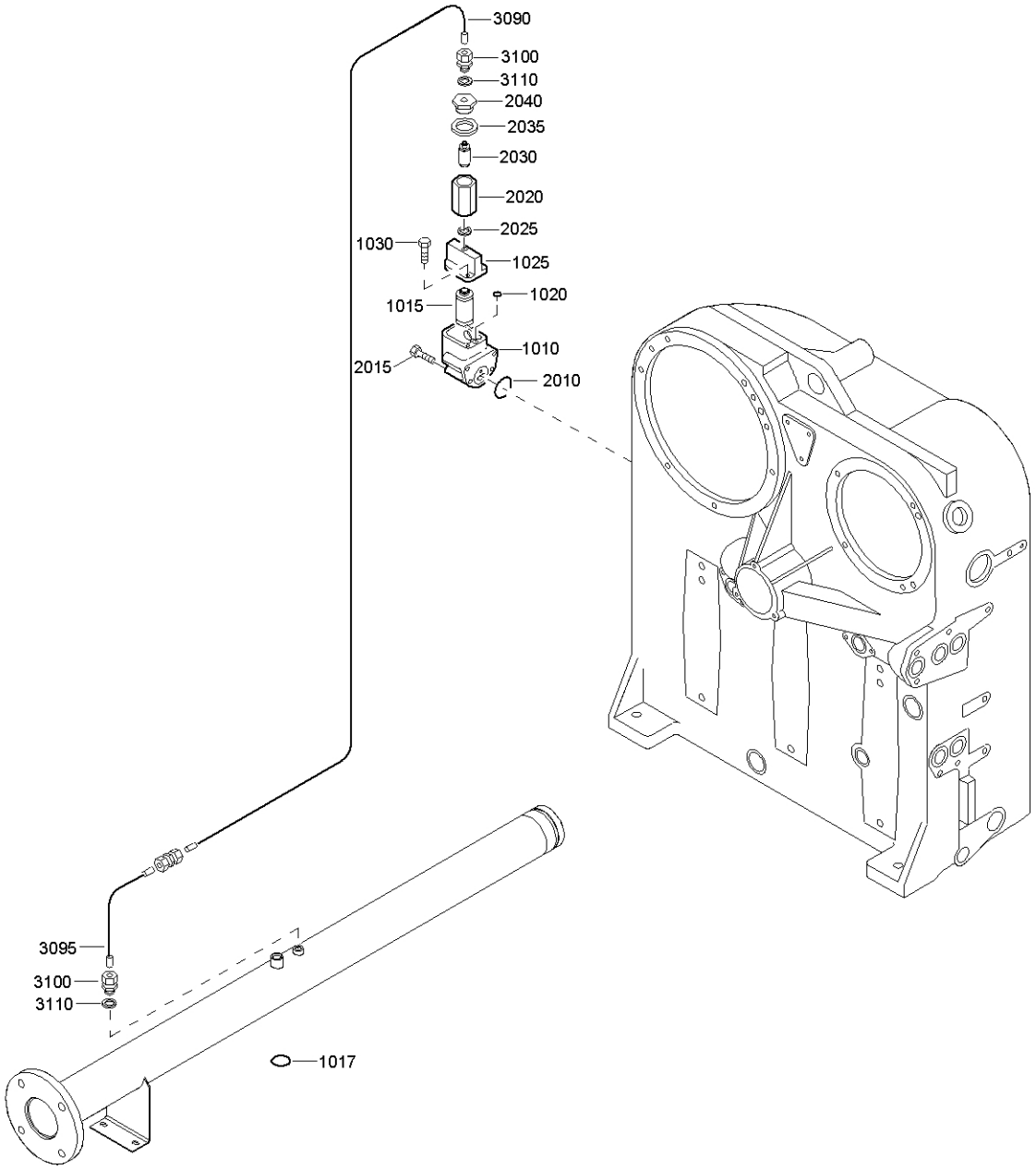
3090
3100
3110
2040
2035
2030
2020
2025
1030
1025
1015
1020
1010
2015
2010
3095
3100
3110
1017

Mounts on gearcasing - ZT

5

Ref.	Part number	Qty	Name	Remarks
			Breather arrangement complete	
1010	1621 1865 00	1	Housing	
1015	1623 5071 00	1	Filter	
1017	0663 9032 01	1	O-Ring	
1020	0663 2107 84	1	O-Ring	
1025	1614 8222 00	1	Cover	
1030	0211 1247 03	2	Hex sock. Screw	
2010	0663 2107 81	1	O-Ring	
2015	0211 1335 03	4	Hex.socket cap screw	
2020	1614 8671 00	1	Housing	
2025	0661 1000 25	1	Seal washer	
2030	1624 1633 09	1	Filter element	
2035	0661 1000 30	1	Seal washer	
2040	1614 8672 00	1	Plug	
3090	1621 7454 00	1	Pipe	
3095	1621 7481 00	1	Pipe	
3100	0580 0013 32	2	Connector	
3110	0661 1000 25	2	Seal washer	

6

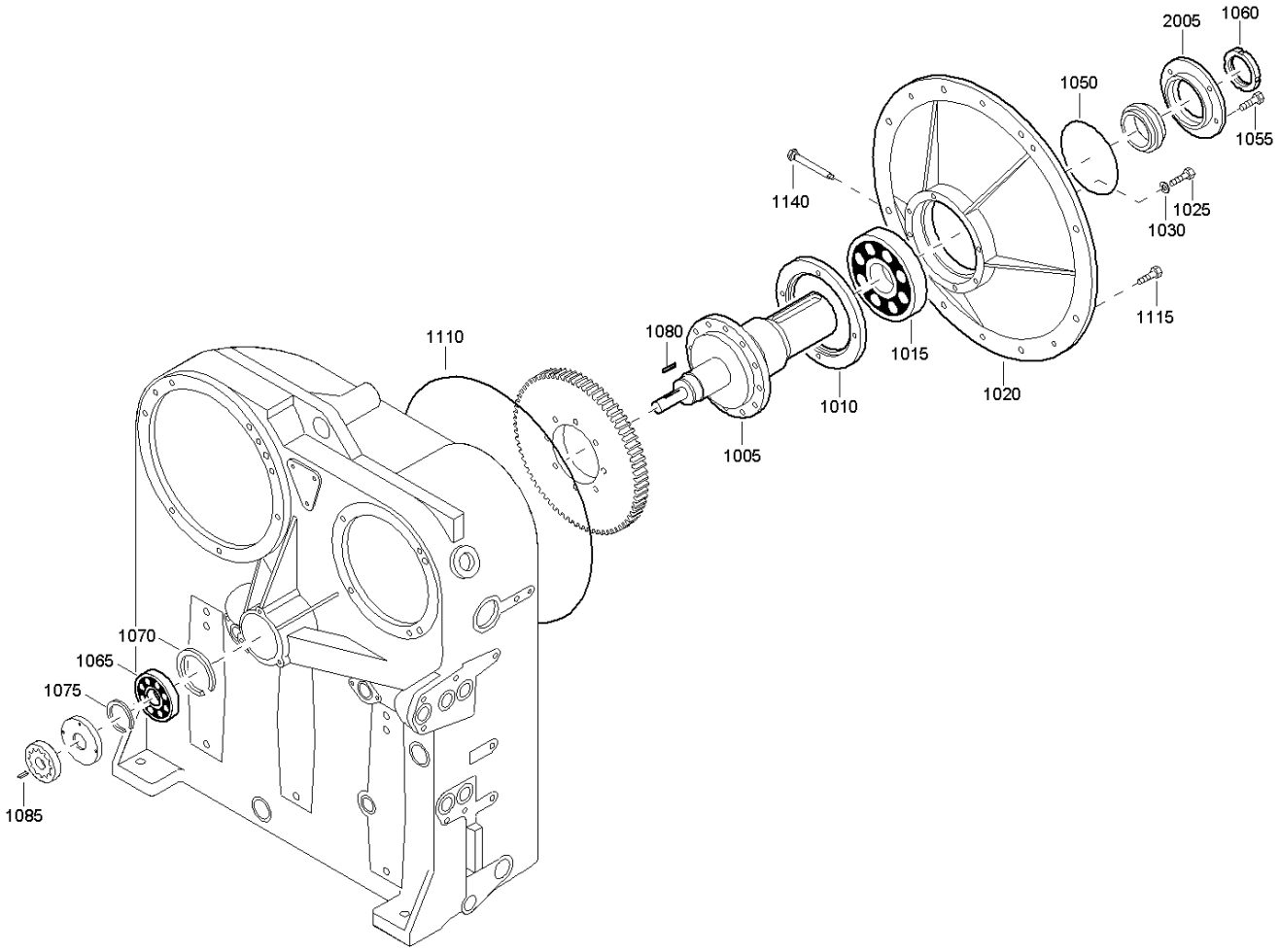
2005
1060
1050
1055
1140
1025
1030
1115
1080
1015
1110
1010
1020
1005
1070
1065
1075
1085

Compressor drive

6

Ref.	Part number	Qty	Name	Remarks
1005	1616 6200 00	1	Drive shaft	
1010	1616 6201 00	1	Retainer	
1015	0502 1090 55	1	Ball bearing	
1020	1616 6427 00	1	Beraing housing	
1025	0147 1369 00	4	Hex.bolt	
1030	0661 1000 49	4	Seal washer	
1050	0663 2107 47	1	O-Ring	
1055	0147 1962 29	2	Hex.bolt	
1060	0295 3120 00	1	Lock nut	
1065	0508 1100 50	1	Roller bearing	
1070	0335 2169 00	1	Internal circlip	
1075	0335 1147 00	1	External clip	
1080	1616 6295 00	1	Key	
1085	0337 0009 24	1	Parallel key	
1110	0663 2107 59	1	O-Ring	
1115	0147 1363 03	4	Hex.bolt	
1140	1619 6032 01	1	Nipple	
2005	1616 6202 00	1	Seal arrangement	

7

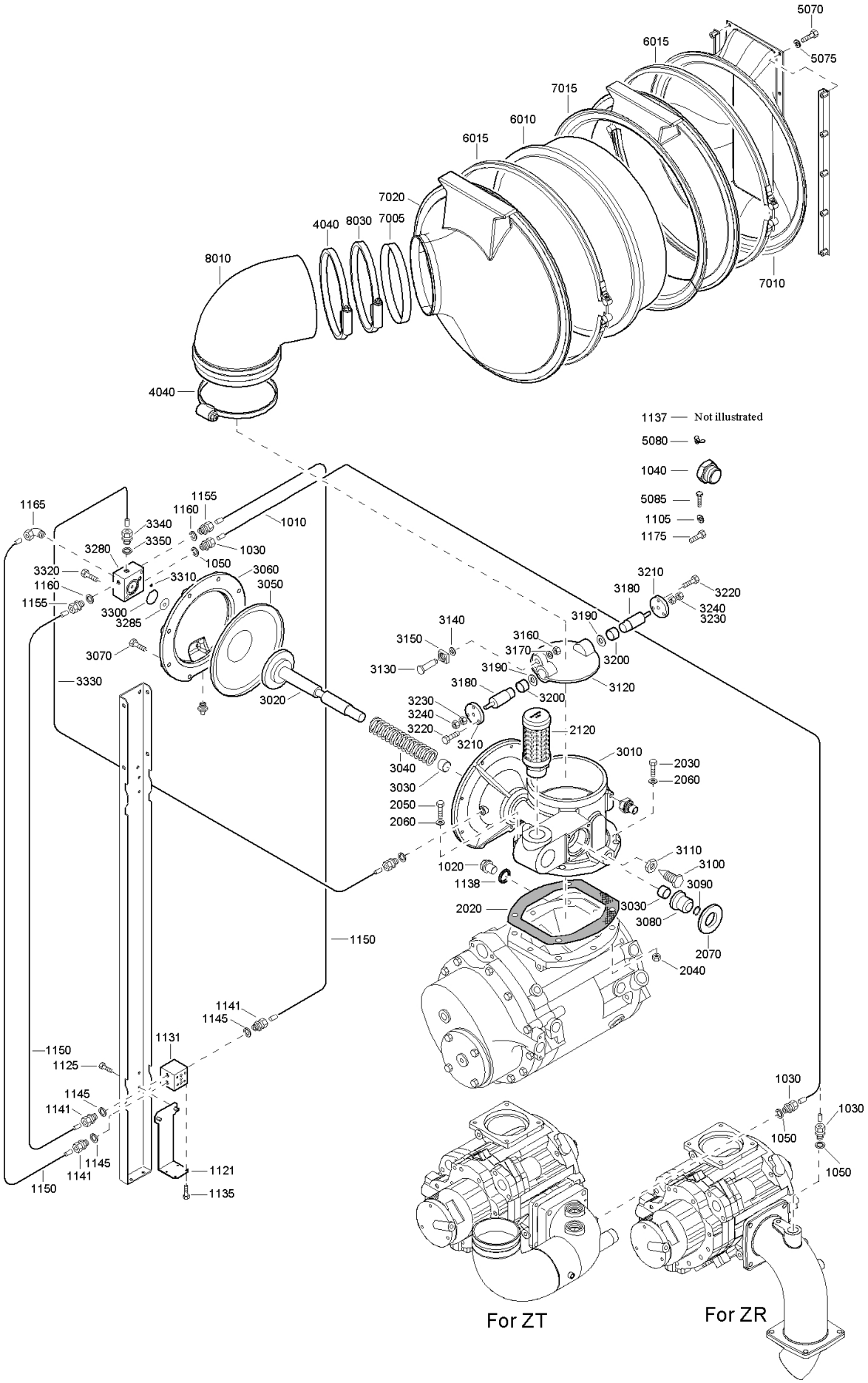
5070
6015
5075
7015
6010
6015
7020
4040
8030
7005
8010
7010
4040
1137 Not illustrated
5080
1040
5085
1105
1175
1165
1155
1160
3340
1010
3350
1030
3280
1050
3320
3310
3060
1160
3050
1155
3300
3285
3070
3330
3020
3210
3180
3220
3240
3230
3190
3140
3150
3160
3170
3130
3190
3200
3180
3120
3200
3230
3240
3220
3210
2120
3010
3040
3030
2050
2060
2030
2060
1020
3110
3100
1138
3090
2020
3030
3080
2070
2040
1150
1141
1145
1131
1150
1125
1145
1141
1145
1141
1150
1121
1135
1030
1030
1050
1050
For ZT
For ZR

Air Inlet

7

Ref.	Part number	Qty	Name	Remarks
			ZR160 7.5 bar(e) 190KW/ 3.3KV O	
			ZR160 7.5 bar(e) 190KW/ 6.6KV O	
			ZR160 7.5 bar(e) 200KW/ 3.3KV O	
			ZR160 7.5 bar(e) 200KW/ 6.6KV O	
			ZR160 8.6 bar(e) 175KW/ 3.3KV O	
			ZR160 8.6 bar(e) 175KW/ 6.6KV O	
			ZR160 8.6 bar(e) 190KW/ 3.3KV O	
			ZR160 8.6 bar(e) 190KW/ 6.6KV O	
			ZR160 10 bar(e) 165KW/ 3.3KV O	
			ZR160 10 bar(e) 165KW/ 6.6KV O	
			ZR160 10 bar(e) 175KW/ 3.3KV O	
			ZR160 10 bar(e) 175KW/ 6.6KV O	
			ZR200 7.5 bar(e) 240KW/ 3.3KV O	
			ZR200 7.5 bar(e) 240KW/ 6.6KV O	
			ZR200 7.5 bar(e) 255KW/ 3.3KV O	
			ZR200 7.5 bar(e) 255KW/ 6.6KV O	
			ZR200 8.6 bar(e) 220KW/ 3.3KV O	
			ZR200 8.6 bar(e) 220KW/ 6.6KV O	
			ZR200 8.6 bar(e) 240KW/ 3.3KV O	
			ZR200 8.6 bar(e) 240KW/ 6.6KV O	
			ZR200 10 bar(e) 200KW/ 3.3KV O	
			ZR200 10 bar(e) 200KW/ 6.6KV O	
			ZR200 10 bar(e) 220KW/ 3.3KV O	
			ZR200 10 bar(e) 220KW/ 6.6KV O	
			ZR250 7.5 bar(e) 300KW/ 3.3KV O	
			ZR250 7.5 bar(e) 300KW/ 6.6KV O	
			ZR250 7.5 bar(e) 320KW/ 3.3KV O	
			ZR250 7.5 bar(e) 320KW/ 6.6KV O	
			ZR250 8.6 bar(e) 280KW/ 3.3KV O	
			ZR250 8.6 bar(e) 280KW/ 6.6KV O	
			ZR250 8.6 bar(e) 300KW/ 3.3KV O	
			ZR250 8.6 bar(e) 300KW/ 6.6KV O	
			ZR250 10 bar(e) 255KW/ 3.3KV O	
			ZR250 10 bar(e) 255KW/ 6.6KV O	
			ZR250 10 bar(e) 280KW/ 3.3KV O	
			ZR250 10 bar(e) 280KW/ 6.6KV O	
			ZR275 7.5 bar(e) 320KW/ 3.3KV O	
			ZR275 7.5 bar(e) 320KW/ 6.6KV O	
			ZR275 7.5 bar(e) 345KW/ 3.3KV O	
			ZR275 7.5 bar(e) 345KW/ 6.6KV O	
1010	1621 3752 00	1	Pipe	
1020	0686 3716 04	1	Plug	
1030	0580 0013 32	2	Connector	
1040	0686 3716 29	2	Hex.plug	
1050	0661 1000 25	2	Seal washer	
1105	0661 1000 25	1	Seal washer	
1121	1621 5284 00	1	Support solenoid	
1125	1079 1472 05	2	Screw	
1131	1621 5285 00	1	Manifold	
1135	0147 1170 03	4	Hex.bolt	
1136	9096 4953 00	1	Foam holder	
1137	1614 6600 00	2	Disc	
1138	0661 1000 25	1	Seal washer	
1141	0580 0013 32	3	Connector	
1145	0661 1000 25	3	Seal washer	
1150	1623 6353 04	3	Flexible	
1155	0580 0013 32	2	Connector	
1160	0661 1000 25	2	Seal washer	
1165	0580 2404 00	1	Pipe coupling	
2020	1621 3639 00	1	Gasket	
2030	0147 1482 00	2	Hex.bolt	
2040	0266 2114 00	2	Hexagon nut	
2050	0147 1962 35	2	Hex.bolt	
2060	0301 2378 00	4	Plain washer	
2070	1621 3120 00	1	Valve seat	
2120	1623 1987 00	1	Muffler	
	1621 3305 83	**1**	**Valve**	
3010	1621 3305 07	• 1	Unloader assembly	
3020	1621 0037 00	• 1	Piston	
3030	0500 4510 03	• 2	Plain bearing	
3040	2102 0067 00	• 1	Spring	
3050	1621 4908 00	• 1	Diaphragm	
3060	1621 3504 00	• 1	Valve cover	
3070	0147 1364 03	• 8	Hex.bolt	
3080	2250 5578 00	• 1	Valve-h p unloader	
3090	0335 1130 00	• 1	Circlip	
3100	1621 3820 00	• 1	Hex.bolt	
3110	0261 1099 29	• 1	Nut	
3120	1621 3760 00	• 1	Valve	
3130	2255 0022 00	• 1	Shaft	
3140	1621 0030 00	• 1	Ring	
3150	2254 7041 00	• 1	Bearing block	
3160	2255 0038 00	• 1	Lock nut	
3170	0301 2178 01	• 1	Plain washer	
3180	**1202 8884 00**	**• 2**	**Pivot**	
	0108 1242 00	•• 2	Elastic pin	
3190	1619 7142 00	• 2	Washer	
3200	1619 7087 00	• 2	Sleeve bearing	

7

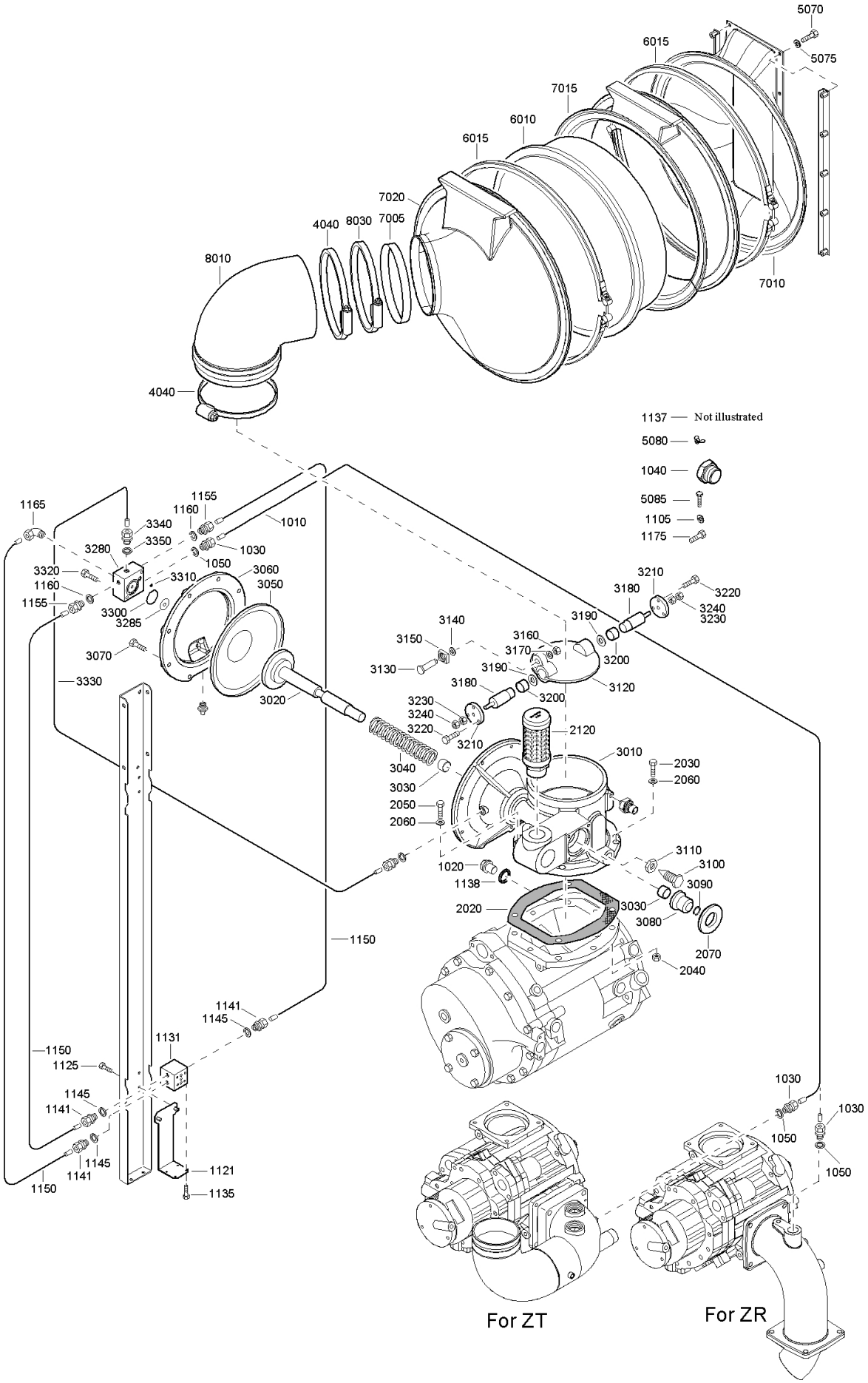
5070
6015
5075
7015
6010
6015
7020
4040
8030
7005
8010
7010
4040
1137 Not illustrated
5080
1040
5085
1105
1175
1165
1155
1160
3340
1010
3350
1030
3280
1050
3320
3060
3310
3050
1160
1155
3300
3285
3070
3330
3020
3210
3180
3220
3240
3230
3190
3140
3150
3160
3170
3130
3190
3200
3180
3200
3120
3230
3240
3220
3210
2120
3010
3040
3030
2050
2060
2030
2060
3110
3100
1020
1138
3090
2020
3030
3080
2070
2040
1150
1141
1145
1131
1150
1125
1145
1141
1145
1141
1150
1121
1135
1030
1030
1050
1050
For ZT
For ZR

Air Inlet

Ref.	Part number		Qty	Name	Remarks
3210	1621 0039 00	•	2	Flange	
3220	0147 1247 03	•	6	Hex.bolt	
3230	0266 2111 00	•	2	Hex.nut	
3240	0277 1311 00	•	2	Hex.nut	
3280	1621 4290 00	•	1	Manifold	
3285	1613 4036 00	•	1	Gasket	
3300	0663 2107 90	•	1	O-Ring	
3310	0663 2108 63	•	1	O-Ring	
3320	0211 1963 78	•	2	Hex.cap screw	
3330	1621 3753 00	•	1	Pipe	
3340	0580 0014 47	•	1	Pipe coupling	
3350	0661 1000 25	•	1	Seal washer	
4040	1615 7884 00		12	Clip	
5070	0147 1249 00		2	Hex.bolt	
5075	0291 1128 15		2	Nut	
5080	0296 1110 00		2	Wing nut	
5085	1619 2766 02		4	Paint stripping bolt	
	1621 5387 81		**1**	**Filter**	
6010	1621 1389 00	•	1	Filter element	
6015	1621 2245 00	•	2	Clamp	
	1621 5387 80	•	**1**	**Air inlet filter complete**	
7005	1621 4883 00	••	1	Ring	
7010	1621 5386 00	••	1	Manifold	
7015	1621 5387 00	••	1	Housing	
7020	1621 5388 00	••	1	Outlet	
8010	1621 4206 80		1	Hose	
8030	0347 6124 00	•	2	Hose clip	
				ZT160 7.5 bar(e)	
				160KW,3.3KV S	
				ZT160 7.5 bar(e)	
				160KW,6.6KV S	
				ZT160 8.6 bar(e)	
				160KW,3.3KV S	
				ZT160 8.6 bar(e)	
				160KW,6.6KV S	
				ZT160 10 bar(e)	
				160KW,3.3KV S	
				ZT160 10 bar(e)	
				160KW,6.6KV S	
				ZT200 7.5 bar(e)	
				200KW,3.3KV S	
				ZT200 7.5 bar(e)	
				200KW,6.6KV S	
				ZT200 8.6 bar(e)	
				200KW,3.3KV S	
				ZT200 8.6 bar(e)	
				200KW,6.6KV S	
				ZT 200 10 bar(e)	
				200KW,3.3KV S	
				ZT200 10 bar(e)	
				200KW,6.6KV S	
				ZT250 7.5 bar(e)	
				250KW,3.3KV S	
				ZT250 7.5 bar(e)	
				250KW,6.6KV S	
				ZT250 8.6 bar(e)	
				250KW,3.3KV S	
				ZT250 8.6 bar(e)	
				250KW,6.6KV S	
				ZT250 10 bar(e)	
				250KW,3.3KV S	
				ZT250 10 bar(e)	
				250KW,6.6KV S	
				ZT275 7.5 bar(e)	
				275KW,3.3KV S	
				ZT 275 7.5 bar(e)	
				275KW,6.6KV S	
				ZT275 8.6 bar(e)	
				275KW,3.3KV S	
				ZT275 8.6 bar(e)	
				275KW,6.6KV S	
				ZT275 10 bar(e)	275KW,3.3KV S
				ZT275 10 bar(e)	275KW,6.6KV S
1010	1621 4202 00		1	Pipe	
1020	0686 3716 04		1	Plug	
1030	0580 0013 32		2	Connector	
1040	0661 1000 25		2	Seal washer	
1050	0661 1000 25		1	Seal washer	
1121	1621 5284 00		1	Support solenoid vlv	
1125	1079 1472 05		2	Screw	
1131	1621 5285 00		1	Manifold	
1135	0147 1170 03		4	Hex.bolt	
1136	9096 4953 00		1	Foam holder	
1141	0580 0013 32		3	Connector	
1145	0661 1000 25		3	Seal washer	
1150	1623 6353 04		3	Flexible	
1155	0580 0013 32		2	Connector	
1160	0661 1000 25		2	Seal washer	
1165	0580 2404 00		1	Pipe coupling	
1175	0147 1480 00		1	Hex.bolt	
2020	1621 3639 00		1	Gasket	
2030	0147 1482 00		2	Hex.bolt	
2040	0266 2114 00		2	Hexagon nut	
2050	0147 1962 35		2	Hex.bolt	
2060	0301 2378 00		4	Plain washer	
2070	1621 3120 00		1	Valve seat	
2120	1623 1987 00		1	Muffler	
	1621 3305 83		**1**	**Valve**	
3010	1621 3305 07	•	1	Unloader assembly	
3020	1621 0037 00	•	1	Piston	
3030	0500 4510 03	•	2	Plain bearing	
3040	2102 0067 00	•	1	Spring	
3050	1621 4908 00	•	1	Diaphragm	
3060	1621 3504 00	•	1	Valve cover	
3070	0147 1364 03	•	8	Hex.bolt	
3080	2250 5578 00	•	1	Valve-h p unloader	
3090	0335 1130 00	•	1	Circlip	
3100	1621 3820 00	•	1	Hex.bolt	
3110	0261 1099 29	•	1	Nut	
3120	1621 3760 00	•	1	Valve	
3130	2255 0022 00	•	1	Shaft	
3140	1621 0030 00	•	1	Ring	
3150	2254 7041 00	•	1	Bearing block	
3160	2255 0038 00	•	1	Lock nut	
3170	0301 2178 01	•	1	Plain washer	
3180	**1202 8884 00**	•	**2**	**Pivot**	
	0108 1242 00	••	2	Elastic pin	
3190	1619 7142 00	•	2	Washer	
3200	1619 7087 00	•	2	Sleeve bearing	
3210	1621 0039 00	•	2	Flange	
3220	0147 1247 03	•	6	Hex.bolt	
3230	0266 2111 00	•	2	Hex.nut	
3240	0277 1311 00	•	2	Hex.nut	
3280	1621 4290 00	•	1	Manifold	
3285	1613 4036 00	•	1	Gasket	
3300	0663 2107 90	•	1	O-Ring	

7

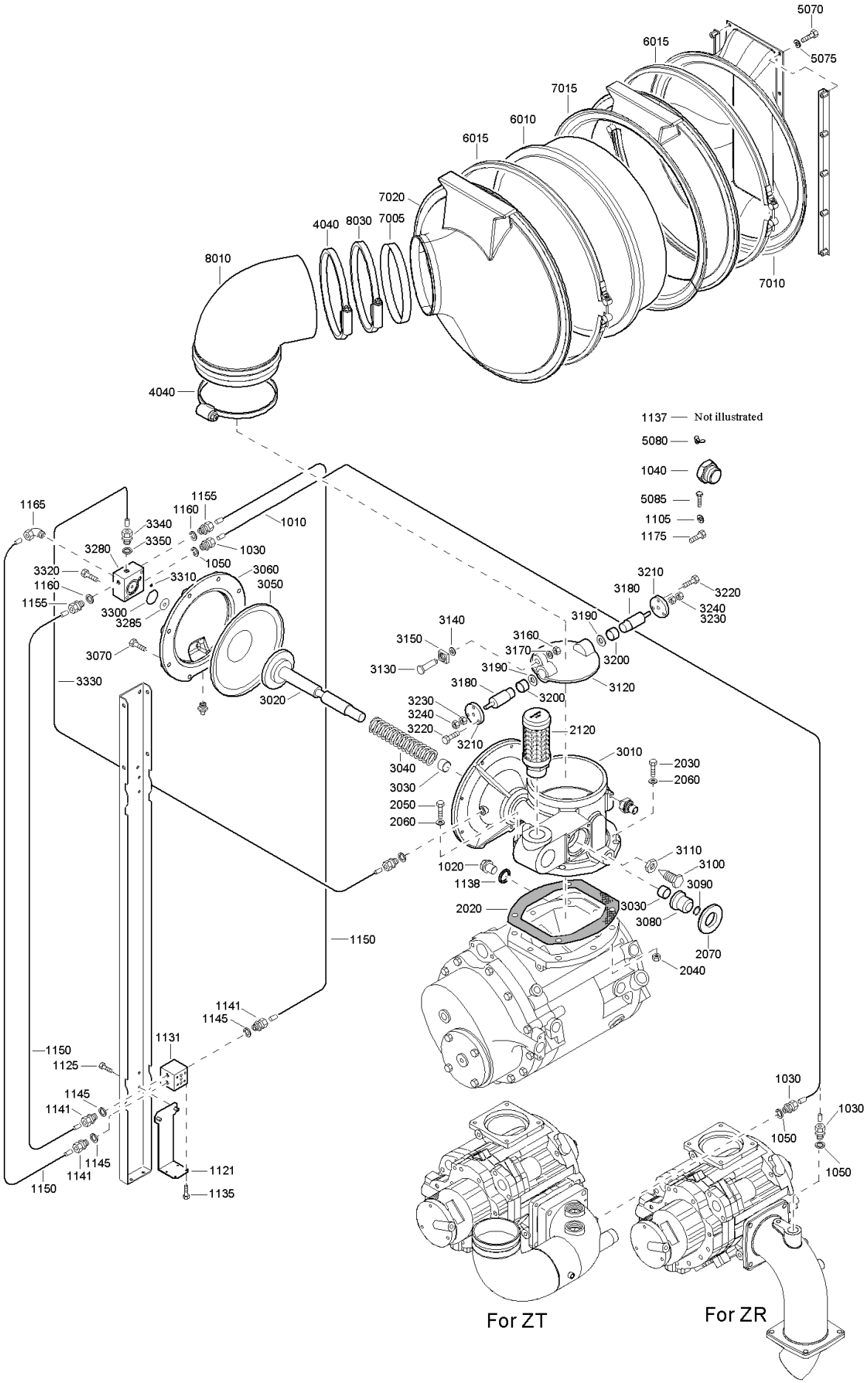
5070
6015
5075
7015
6010
6015
7020
4040
8030
7005
8010
7010
4040
1137 Not illustrated
5080
1040
5085
1105
1175
1165
1155
1160
3340
1010
3350
1030
3280
1050
3320
3310
3060
1160
3050
1155
3300
3285
3070
3330
3020
3210
3180
3220
3240
3230
3140
3190
3150
3160
3170
3130
3190
3200
3180
3120
3200
3230
3240
3220
3210
2120
3010
3040
2030
3030
2060
2050
2060
3110
1020
3100
1138
3090
2020
3030
3080
2070
2040
1150
1141
1145
1131
1150
1125
1145
1141
1145
1141
1150
1121
1135
1030
1030
1050
1050
For ZT
For ZR

Air Inlet

7

Ref.	Part number		Qty	Name	Remarks
3310	0663 2108 63	•	1	O-Ring	
3320	0211 1963 78	•	2	Hex.cap screw	
3330	1621 3753 00	•	1	Pipe	
3340	0580 0014 47	•	1	Pipe coupling	
3350	0661 1000 25	•	1	Seal washer	
4040	1615 7884 00		12	Clip	
5070	0147 1249 00		2	Hex.bolt	
5075	0291 1128 15		2	Nut	
5080	0296 1110 00		2	Wing nut	
5085	1619 2766 02		4	Paint stripping bolt	

Ref.	Part number		Qty	Name	Remarks
	1621 5387 81		**1**	**Filter**	
6010	1621 1389 00	•	1	Filter element	
6015	1621 2245 00	•	2	Clamp	
	1621 5387 80	•	**1**	**Air inlet filter complete**	
7005	1621 4883 00	••	1	Ring	
7010	1621 5386 00	••	1	Manifold	
7015	1621 5387 00	••	1	Housing	
7020	1621 5388 00	••	1	Outlet	
8010	1621 4206 80		1	Hose	
8030	0347 6124 00	•	2	Hose clip	

8

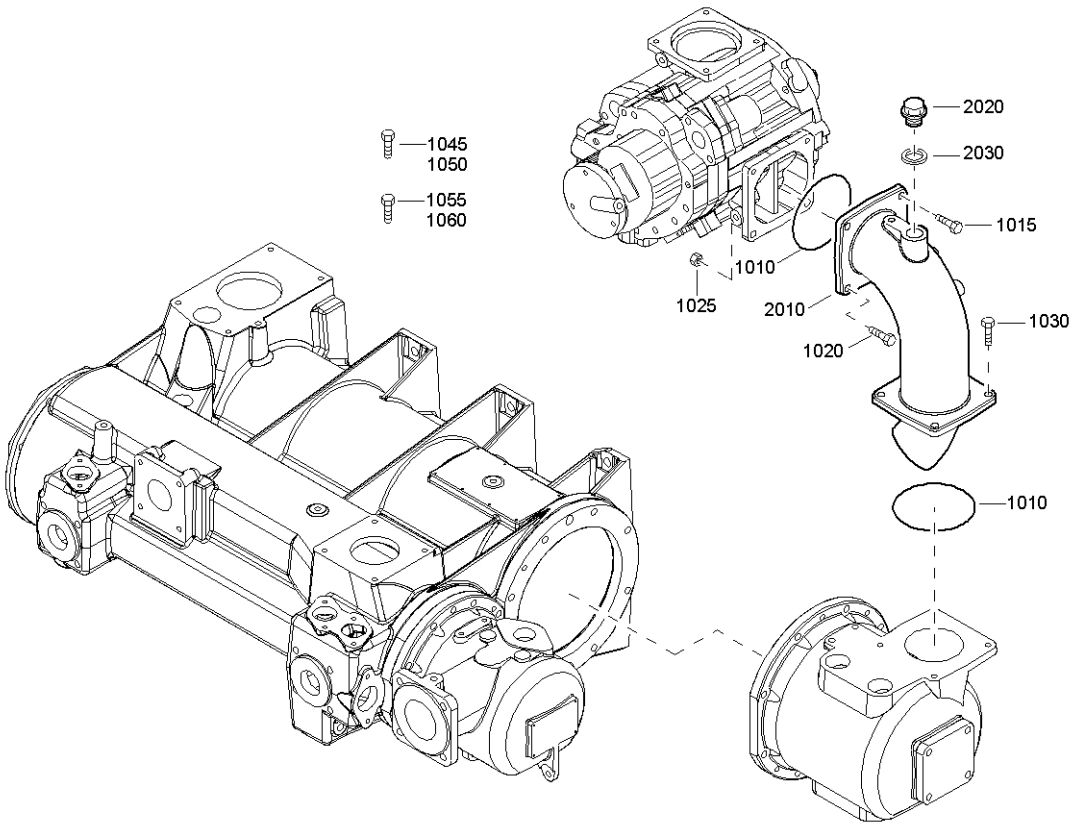
1045
1050
1055
1060
2020
2030
1015
1010
1025
2010
1030
1020
1010

Airflow HP Inlet - ZR

8

Ref.	Part number	Qty	Name	Remarks
1010	0663 2107 76	2	O-Ring	
1015	0147 1402 03	2	Hex. head screw	
1020	0147 1962 32	2	Bolt	
1025	0266 2112 00	2	Hexagon nut	
1030	0147 1402 03	4	Hex. head screw	
1045	0160 6105 00	4	Screw	
1050	0160 6105 00	4	Screw	
1055	1619 2766 00	2	Paint stripping bolt	
1060	1619 2766 00	4	Paint stripping bolt	
2010	1621 4054 00	1	Pipe	
2020	0686 3716 07	1	Plug	
2030	0661 1000 30	1	Seal washer	

9

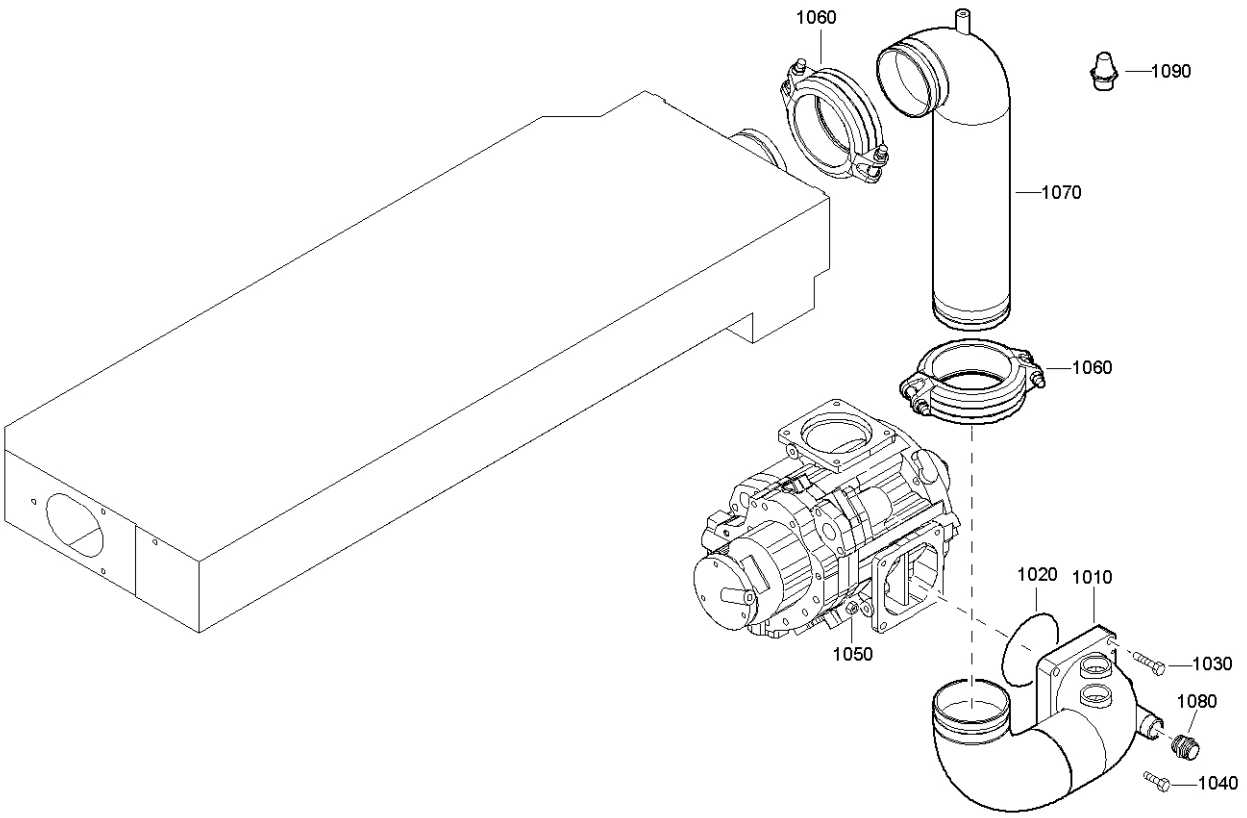

Airflow HP Inlet - ZT

9

Ref.	Part number	Qty	Name	Remarks
1010	9096 4385 00	1	Pipe	
1020	0663 2106 58	1	O-Ring	
1030	0147 1406 00	2	Hex.bolt	
1040	0147 1409 00	2	Hex.bolt	
1050	0266 2112 00	2	Hexagon nut	
1060	0634 1001 10	2	Pipe coupling	
1070	9096 4386 00	1	Pipe	
1080	0603 4106 03	1	Hex.nipple	
1090	0803 5011 10	1	Silencer	

10

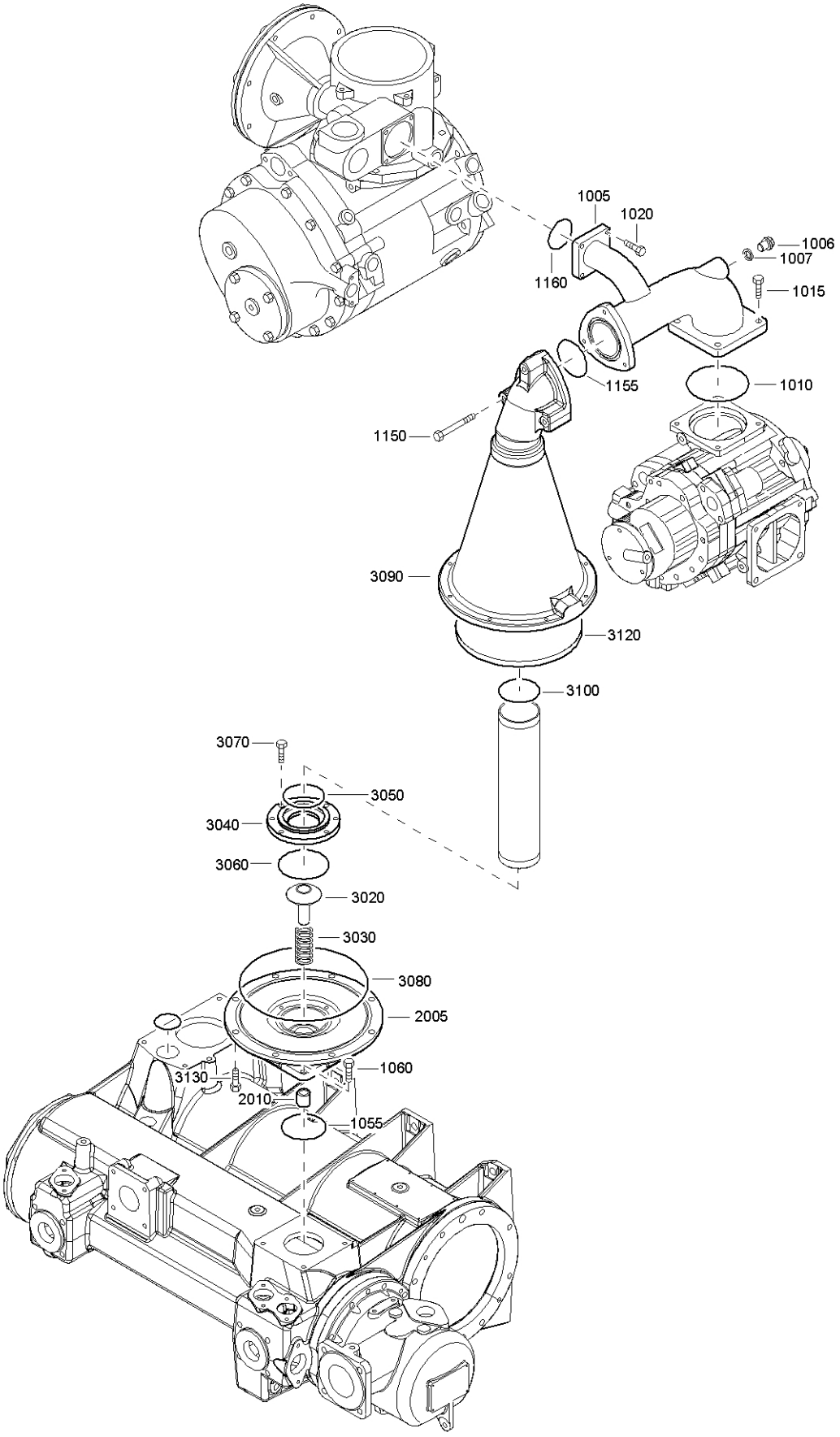
1005
1020
1006
1007
1160
1015
1155
1010
1150
3090
3120
3100
3070
3050
3040
3060
3020
3030
3080
2005
1060
3130
2010
1055

Air flow - HP Outlet - ZR

10

Ref.	Part number	Qty	Name	Remarks
1005	1621 3127 00	1	Pipe	
1006	0686 3716 04	1	Plug	
1007	0661 1000 25	1	Seal washer	
1010	0663 2106 58	1	O-Ring	
1015	0147 1402 03	4	Hex. head screw	
1020	0147 1962 29	4	Hex.bolt	
1055	0663 2107 80	1	O-Ring	
1060	0147 1402 03	4	Hex. head screw	
1150	1621 3013 00	3	Hex.bolt	
1155	0663 2107 50	1	O-Ring	
1160	0663 2107 12	1	O-Ring	
2005	1621 3199 00	1	Valve housing	
2010	2001 0225 00	1	Bush	
3020	1604 9851 01	1	Valve	
3030	2102 0827 00	1	Spring	
3040	1621 3467 00	1	Valve seat	
3050	0663 2107 50	1	O-Ring	
3060	0663 2107 79	1	O-Ring	
3070	0147 1363 03	4	Hex.bolt	
3080	0663 2107 49	1	O-Ring	
3090	1621 3198 00	1	Silencer	
3100	0663 2107 50	1	O-Ring	
3120	1623 5751 00	1	Insulation	
3130	0147 1402 03	8	Hex. head screw	

11

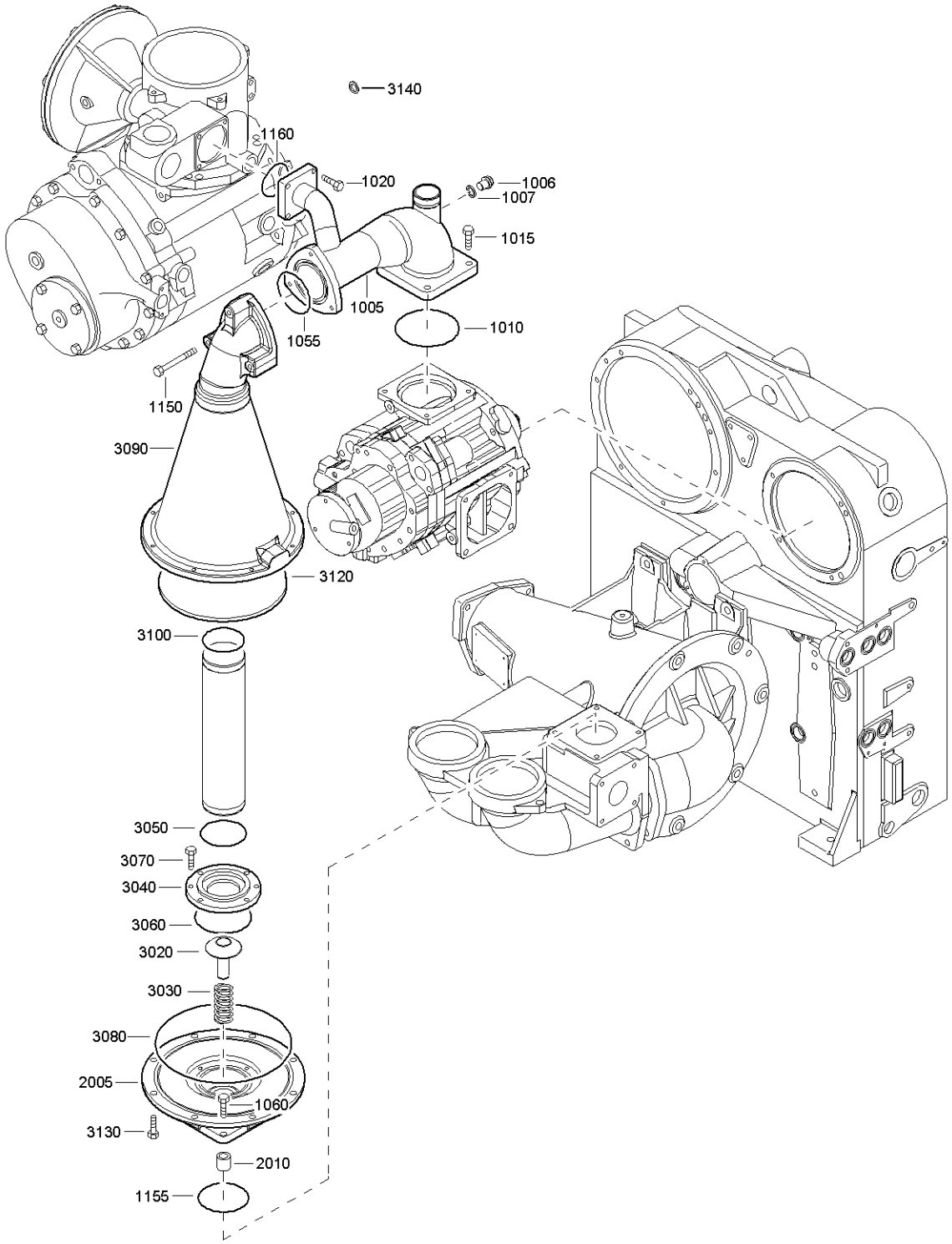
3140
1160
1020
1006
1007
1015
1005
1055
1010
1150
3090
3120
3100
3050
3070
3040
3060
3020
3030
3080
2005
1060
3130
2010
1155

Air flow - HP Outlet - ZT

11

Ref.	Part number	Qty	Name	Remarks
1005	1621 3127 00	1	Pipe	
1006	0686 3716 04	1	Plug	
1007	0661 1000 25	1	Seal washer	
1010	0663 2106 58	1	O-Ring	
1015	0147 1402 03	4	Hex. head screw	
1020	0147 1962 29	4	Hex.bolt	
1055	0663 2107 80	1	O-Ring	
1060	0147 1402 03	4	Hex. head screw	
1150	1621 3013 00	3	Hex.bolt	
1155	0663 2107 50	1	O-Ring	
1160	0663 2107 12	1	O-Ring	
2005	1621 3199 10	1	Valve housing	
2010	2001 0225 00	1	Bush	

Ref.	Part number	Qty	Name	Remarks
3020	1604 9851 01	1	Valve	
3030	2102 0827 00	1	Spring	
3040	1621 3467 00	1	Valve seat	
3050	0663 2107 50	1	O-Ring	
3060	0663 2107 79	1	O-Ring	
3070	0147 1363 03	4	Hex.bolt	
3080	0663 2107 49	1	O-Ring	
3090	1621 3198 10	1	Silencer	
3100	0663 2107 50	1	O-Ring	
3120	1623 5751 00	1	Insulation	
3130	0147 1402 03	8	Hex. head screw	
3140	0661 1000 32	2	Seal washer	

12

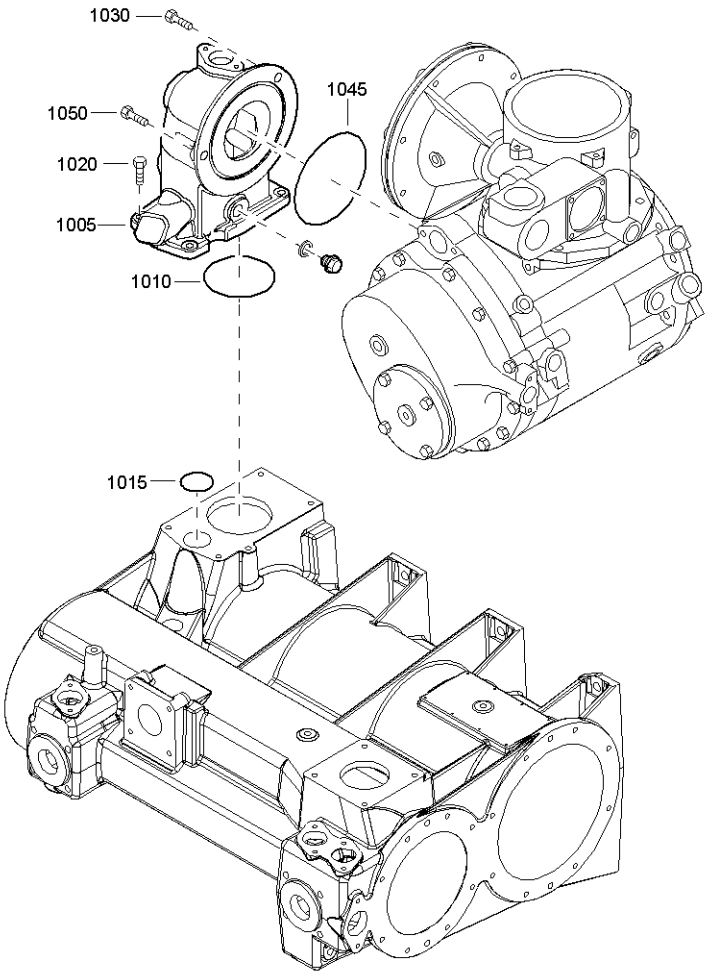

Air flow - LP Outlet - ZR

12

Ref.	Part number	Qty	Name	Remarks
1005	1621 3109 11	1	Outlet	
1010	0663 2106 20	1	O-Ring	
1015	0663 2107 77	1	O-Ring	
1020	0147 1403 03	3	Hex.bolt	
1030	0147 1497 00	1	Hex bolt	
1045	0663 2106 26	1	O-Ring	
1050	0147 1962 35	2	Hex.bolt	

13

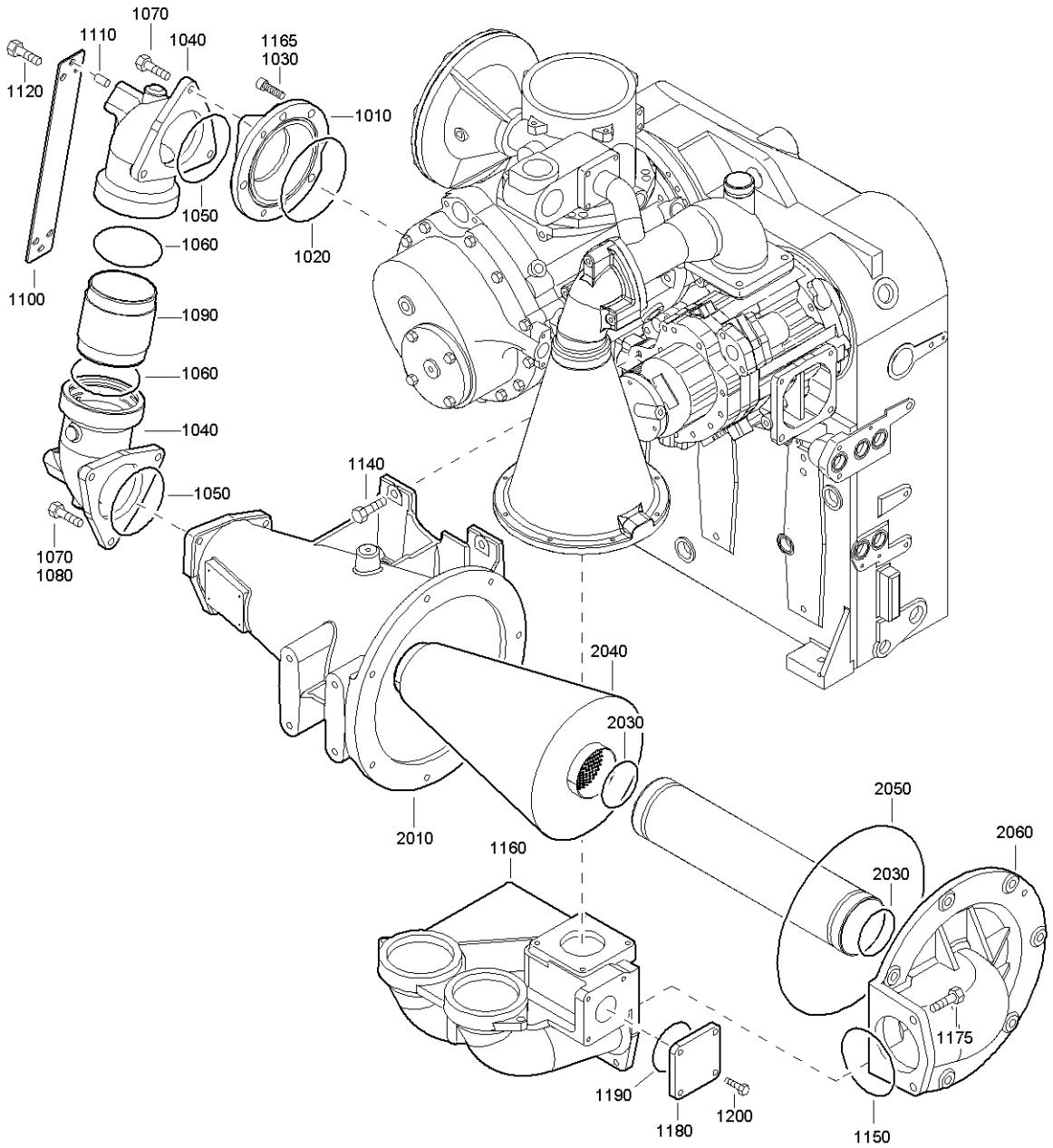
1070
1110
1040
1165
1030
1120
1010
1050
1020
1060
1100
1090
1060
1040
1140
1050
1070
1080
2040
2030
2050
2060
2010
1160
2030
1175
1190
1180
1200
1150

Air flow - LP Outlet - ZT

13

Ref.	Part number	Qty	Name	Remarks
1010	1621 6218 11	1	Adaptor	
1020	0663 2106 97	1	O-Ring	
1030	0211 1960 28	5	Cap screw	
1040	1621 6178 11	2	Pipe	
1050	0663 2106 58	2	O-Ring	
1060	0663 2108 49	2	O-Ring	
1070	0147 1479 00	12	Hex.bolt	
1080	0147 1489 00	1	Hex.bolt	
1090	9096 4382 00	1	Pipe	
1100	1621 2799 00	1	Bracket	
1110	0101 1951 53	2	Pin	
1120	0147 1476 03	2	Hex. head screw	
1140	0147 1477 03	4	Hex. head screw	
1150	0663 2106 58	1	O-Ring	
1160	1621 1426 11	1	Connection	
1165	0211 1960 28	1	Cap screw	
1175	0147 1478 03	5	Hex.bolt	
1180	1621 2811 00	1	Flange	
1190	0663 2107 80	1	O-Ring	
1200	0147 1402 03	4	Hex. head screw	
2010	1621 1425 08	1	Silencer	
2030	0663 2106 20	2	O-Ring	
2040	1623 5753 00	1	Insulation	
2050	0663 2106 98	1	O-Ring	
2060	1621 1424 11	1	Collector	

14

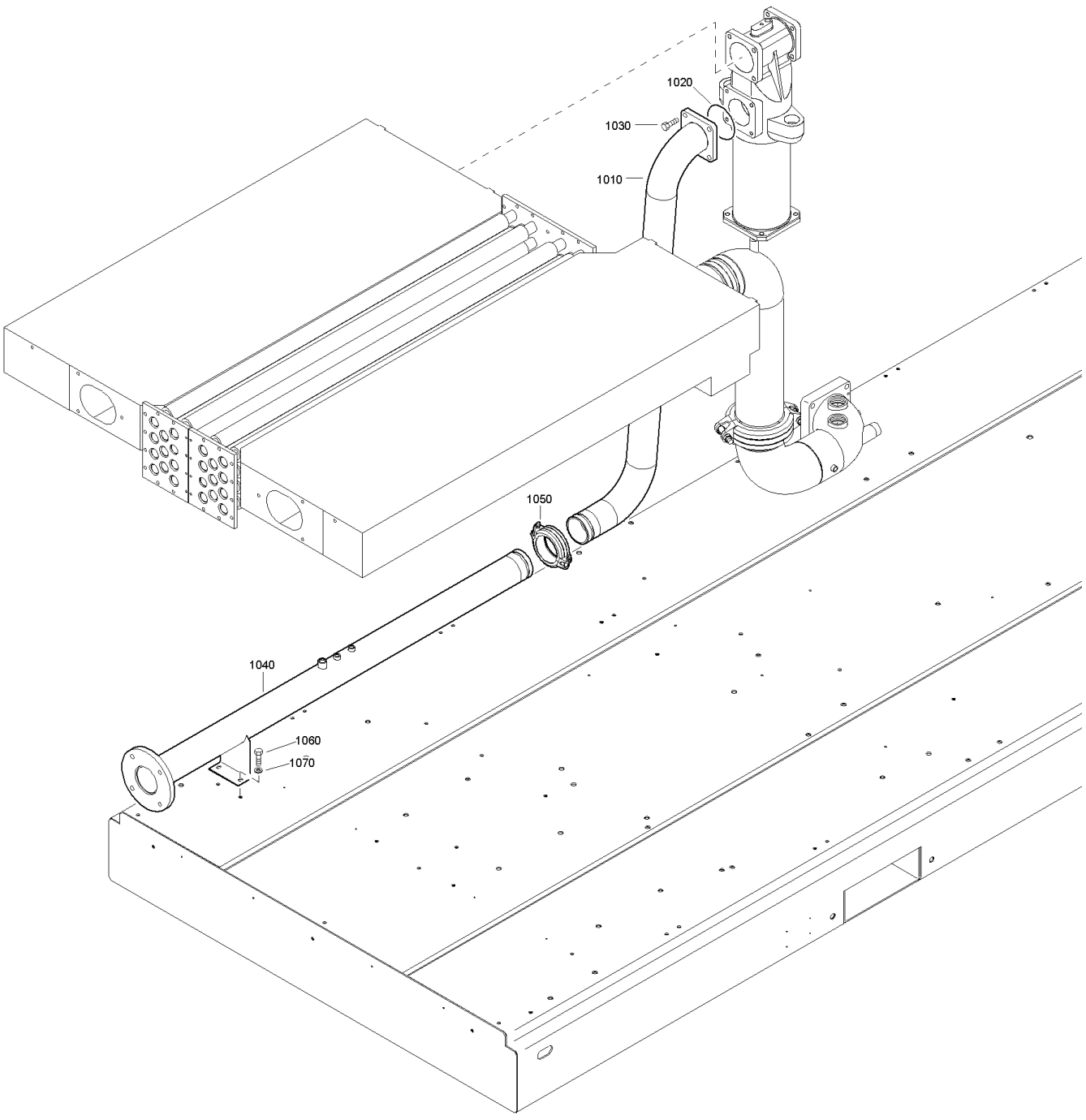

Air outlet - ZT pack with aftercooler

14

Ref.	Part number	Qty	Name	Remarks
1010	9096 4383 00	1	Pipe	
1020	0663 2107 80	1	O-Ring	
1030	0147 1402 03	4	Hex. head screw	
1040	9096 4387 00	1	Pipe	
1050	1624 4132 85	1	Coupling	
1060	0147 1323 00	2	Hex.bolt	
1070	0301 2335 00	2	Plain washer	

15

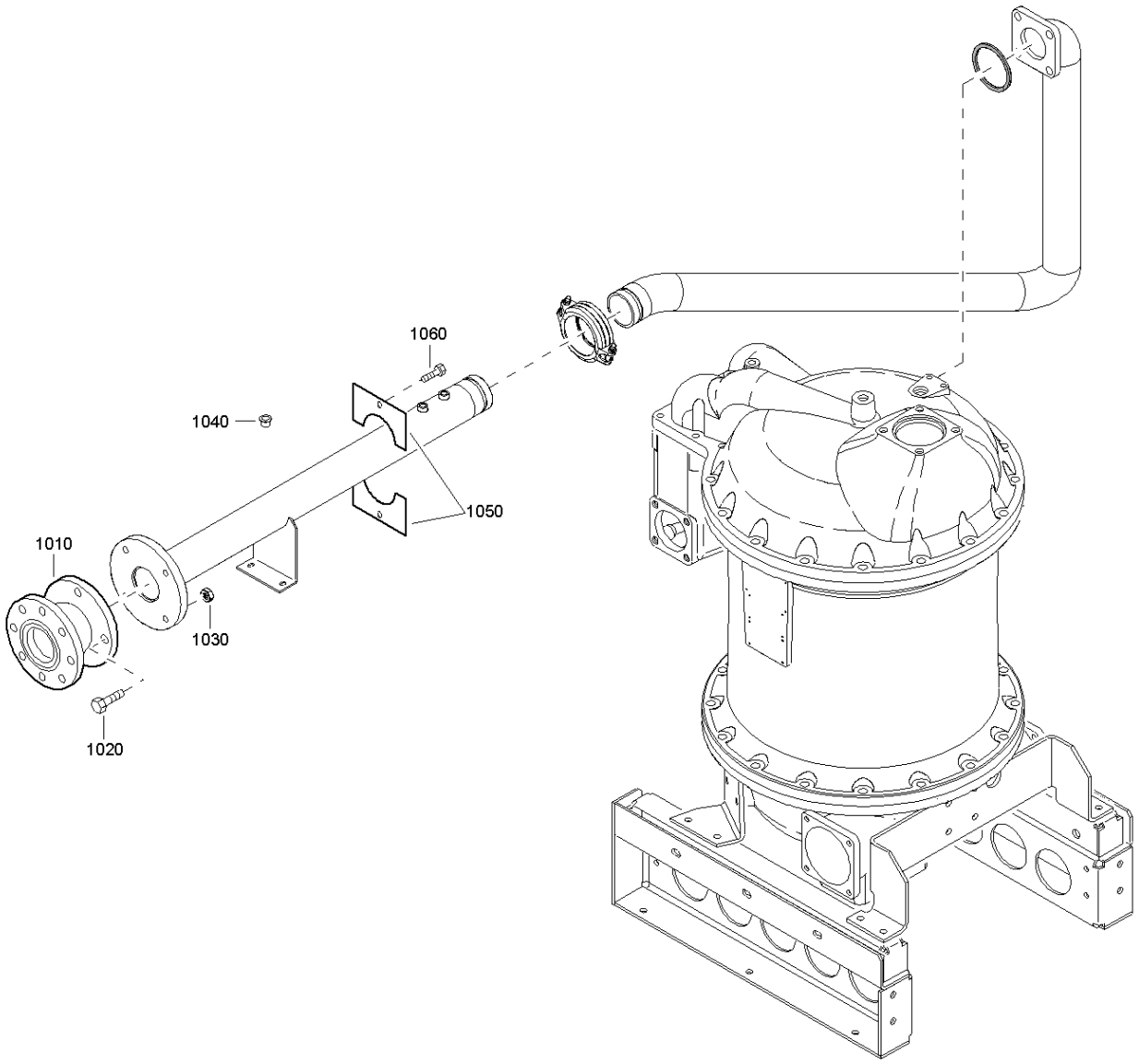

Air outlet - ZT connection air

15

Ref.	Part number	Qty	Name	Remarks
1010	1623 2121 00	1	Compensator	
1020	0147 1480 03	4	Hex.bolt	
1030	0266 2114 00	4	Hexagon nut	
1040	1613 5983 01	1	Hex.plug	
1050	1621 4217 00	2	Plate	
1060	1079 1472 05	2	Screw	

16

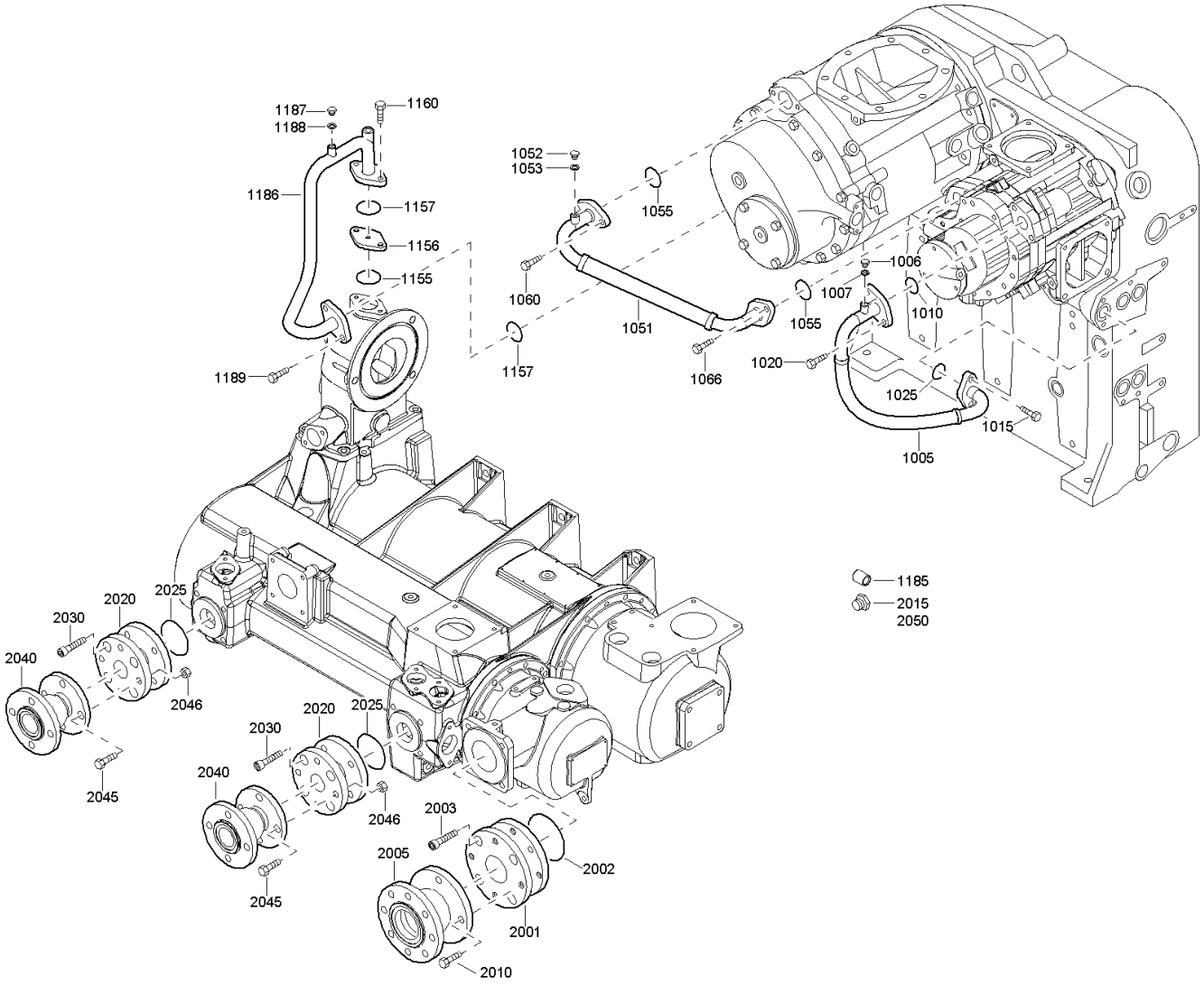
1187
1188
1160
1186
1157
1156
1155
1189
1052
1053
1055
1060
1051
1157
1066
1006
1007
1055
1010
1020
1025
1015
1005
1185
2015
2050
2020
2025
2030
2040
2046
2045
2020
2025
2030
2040
2046
2003
2005
2002
2001
2010
2045

Water system - ZR

16

Ref.	Part number	Qty	Name	Remarks
1005	1621 9553 00	1	Pipe	
1006	0686 3716 44	1	Hexagon plug	
1007	0661 1000 25	1	Seal washer	
1010	0663 2107 86	1	O-Ring	
1015	0147 1962 30	2	Hex.bolt	
1020	0147 1412 00	2	Hex.bolt	
1025	0663 2107 81	1	O-Ring	
1051	1621 9554 00	1	Pipe	
1052	0686 3716 44	1	Hexagon plug	
1053	0661 1000 25	1	Seal washer	
1055	0663 2107 86	2	O-Ring	
1060	0147 1412 00	2	Hex.bolt	
1066	0147 1413 00	2	Hex.bolt	
1155	0663 2107 86	1	O-Ring	
1156	1621 3045 00	1	Flange	
1157	0663 2107 86	2	O-Ring	
1160	0147 1365 03	2	Hex.bolt	
1185	0607 1100 76	1	Socket	
1186	1621 3815 00	1	Pipe	
1187	0686 3716 44	1	Hexagon plug	
1188	0661 1000 25	1	Seal washer	
1189	0147 1413 00	2	Hex.bolt	
2001	9096 4399 00	1	Pipe	
2002	0663 2107 79	1	O-Ring	
2003	0211 1960 28	4	Cap screw	
2005	1623 2121 00	1	Compensator	
2010	0147 1480 03	4	Hex.bolt	
2015	1613 5983 01	1	Hex.plug	
2020	9096 4400 00	2	Pipe	
2025	0663 3143 00	2	O-Ring	
2030	0211 1487 03	8	Cap screw	
2040	1623 3125 00	2	Compensator	
2045	0147 1478 03	8	Hex.bolt	
2046	0266 2114 00	8	Hexagon nut	
2050	0686 9170 00	2	Hex.plug	

17

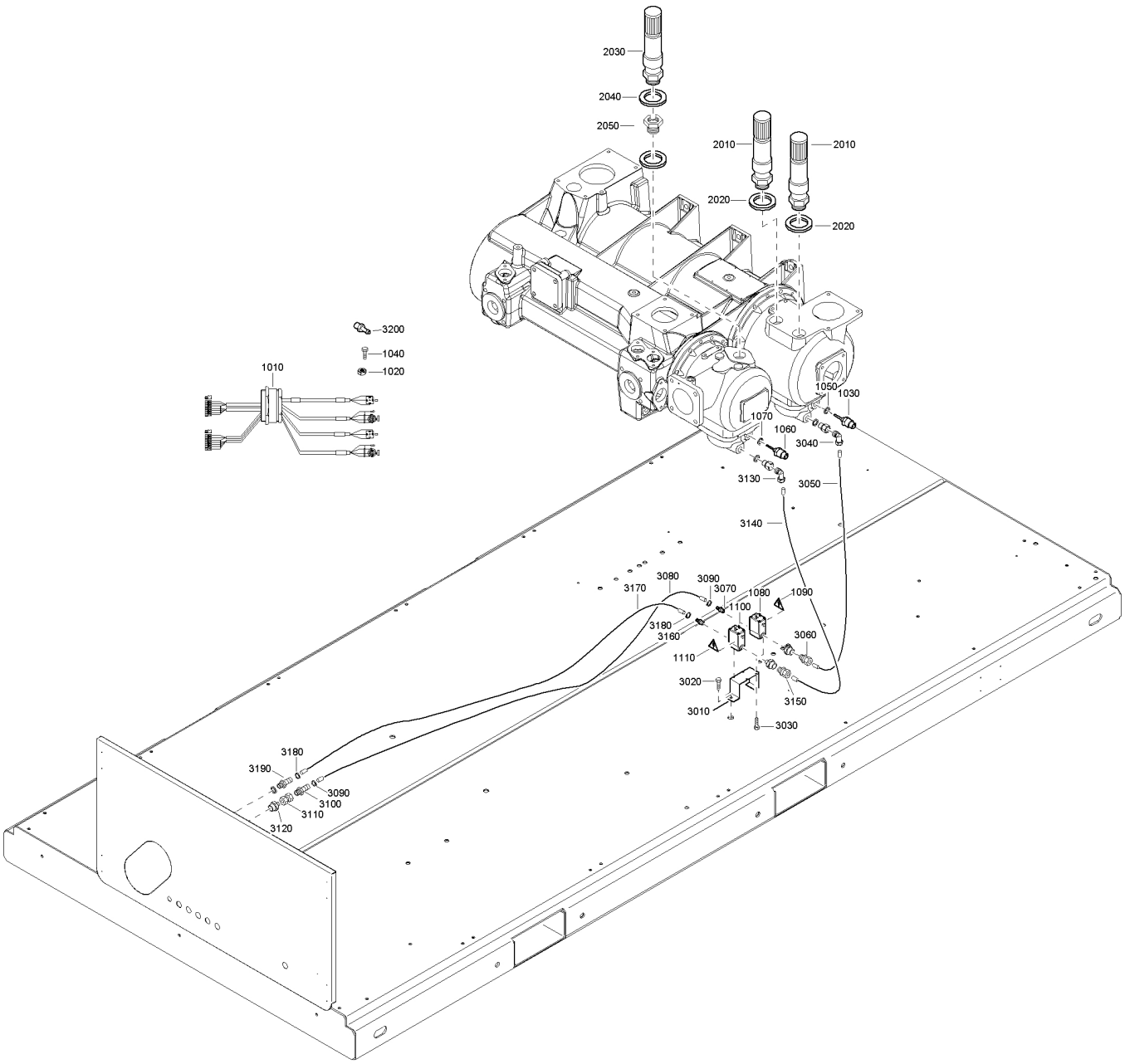
2030
2040
2050
2010
2010
2020
2020
3200
1040
1020
1010
1050
1030
1070
1060
3040
3130
3050
3140
3080
3090
3070
3170
1080
1090
1100
3180
3160
3060
1110
3020
3150
3010
3030
3180
3190
3090
3100
3110
3120

Drain system - ZR

Ref.	Part number	Qty	Name	Remarks
			Electrical wiring	
1010	1621 6932 01	1	Wiring for drain	
1020	0697 9809 06	1	Lock nut	
1030	1089 0659 57	1	Sensor	
1040	0147 1320 03	1	Hex.bolt	
1050	0661 1000 25	1	Seal washer	
1060	1089 0659 57	1	Sensor	
1070	0661 1000 25	1	Seal washer	
1080	1089 9439 18	1	Valve	
1090	1088 1001 01	1	Warning mark	
1100	1089 9439 16	1	Valve	
1110	1088 1001 01	1	Warning mark	
			ZR250 7.5 bar(e) 300KW/ 3.3KV O	
			ZR250 7.5 bar(e) 300KW/ 6.6KV O	
			ZR250 7.5 bar(e) 320KW/ 3.3KV O	
			ZR250 7.5 bar(e) 320KW/ 6.6KV O	
			ZR250 8.6 bar(e) 280KW/ 3.3KV O	
			ZR250 8.6 bar(e) 280KW/ 6.6KV O	
			ZR250 8.6 bar(e) 300KW/ 3.3KV O	
			ZR250 8.6 bar(e) 300KW/ 6.6KV O	
			ZR275 7.5 bar(e) 320KW/ 3.3KV O	
			ZR275 7.5 bar(e) 320KW/ 6.6KV O	
			ZR275 7.5 bar(e) 345KW/ 3.3KV O	
			ZR275 7.5 bar(e) 345KW/ 6.6KV O	
			Safety valve complete	
2010	0830 1008 23	2	Safety valve	
2020	0661 1000 32	2	Seal washer	
2030	0830 1008 09	1	Safety valve	
2040	0661 1000 32	1	Seal washer	
2050	0605 8700 75	1	Bushing	
			ZR200 10 bar(e) 200KW/ 3.3KV O	
			ZR200 10 bar(e) 200KW/ 6.6KV O	
			ZR200 10 bar(e) 220KW/ 3.3KV O	
			ZR200 10 bar(e) 220KW/ 6.6KV O	
			ZR250 10 bar(e) 255KW/ 3.3KV O	
			ZR250 10 bar(e) 255KW/ 6.6KV O	
			ZR250 10 bar(e) 280KW/ 3.3KV O	
			ZR250 10 bar(e) 280KW/ 6.6KV O	

Ref.	Part number	Qty	Name	Remarks
			Safety valve complete	
2010	0830 1008 23	2	Safety valve	
2020	0661 1000 32	2	Seal washer	
2030	0830 1008 13	1	Safety valve	
2040	0661 1000 32	1	Seal washer	
2050	0605 8700 75	1	Bushing	
			ZR160 7.5 bar(e) 190KW/ 3.3KV O	
			ZR160 7.5 bar(e) 190KW/ 6.6KV O	
			ZR160 7.5 bar(e) 200KW/ 3.3KV O	
			ZR160 7.5 bar(e) 200KW/ 6.6KV O	
			ZR160 8.6 bar(e) 175KW/ 3.3KV O	
			ZR160 8.6 bar(e) 175KW/ 6.6KV O	
			ZR160 8.6 bar(e) 190KW/ 3.3KV O	
			ZR160 8.6 bar(e) 190KW/ 6.6KV O	
			ZR160 10 bar(e) 165KW/ 3.3KV O	
			ZR160 10 bar(e) 165KW/ 6.6KV O	
			ZR160 10 bar(e) 175KW/ 3.3KV O	
			ZR160 10 bar(e) 175KW/ 6.6KV O	
			ZR200 7.5 bar(e) 240KW/ 3.3KV O	
			ZR200 7.5 bar(e) 240KW/ 6.6KV O	
			ZR200 7.5 bar(e) 255KW/ 3.3KV O	
			ZR200 7.5 bar(e) 255KW/ 6.6KV O	
			ZR200 8.6 bar(e) 220KW/ 3.3KV O	
			ZR200 8.6 bar(e) 220KW/ 6.6KV O	
			ZR200 8.6 bar(e) 240KW/ 3.3KV O	
			ZR200 8.6 bar(e) 240KW/ 6.6KV O	
			Safety valve complete	
2010	0830 1008 23	2	Safety valve	
2020	0661 1000 32	2	Seal washer	
2030	0830 1008 08	1	Safety valve	
2040	0661 1000 31	1	Washer	
2050	0605 8400 19	1	Bushing	
			Drains complete	
3010	1621 5106 00	1	Support for hat drain	
3020	1619 2766 00	1	Paint stripping bolt	
3030	0147 1170 03	4	Hex.bolt	
3040	0581 1200 29	1	Pipe coupling	
3050	0070 6002 06	AR	Nylon tube	

17

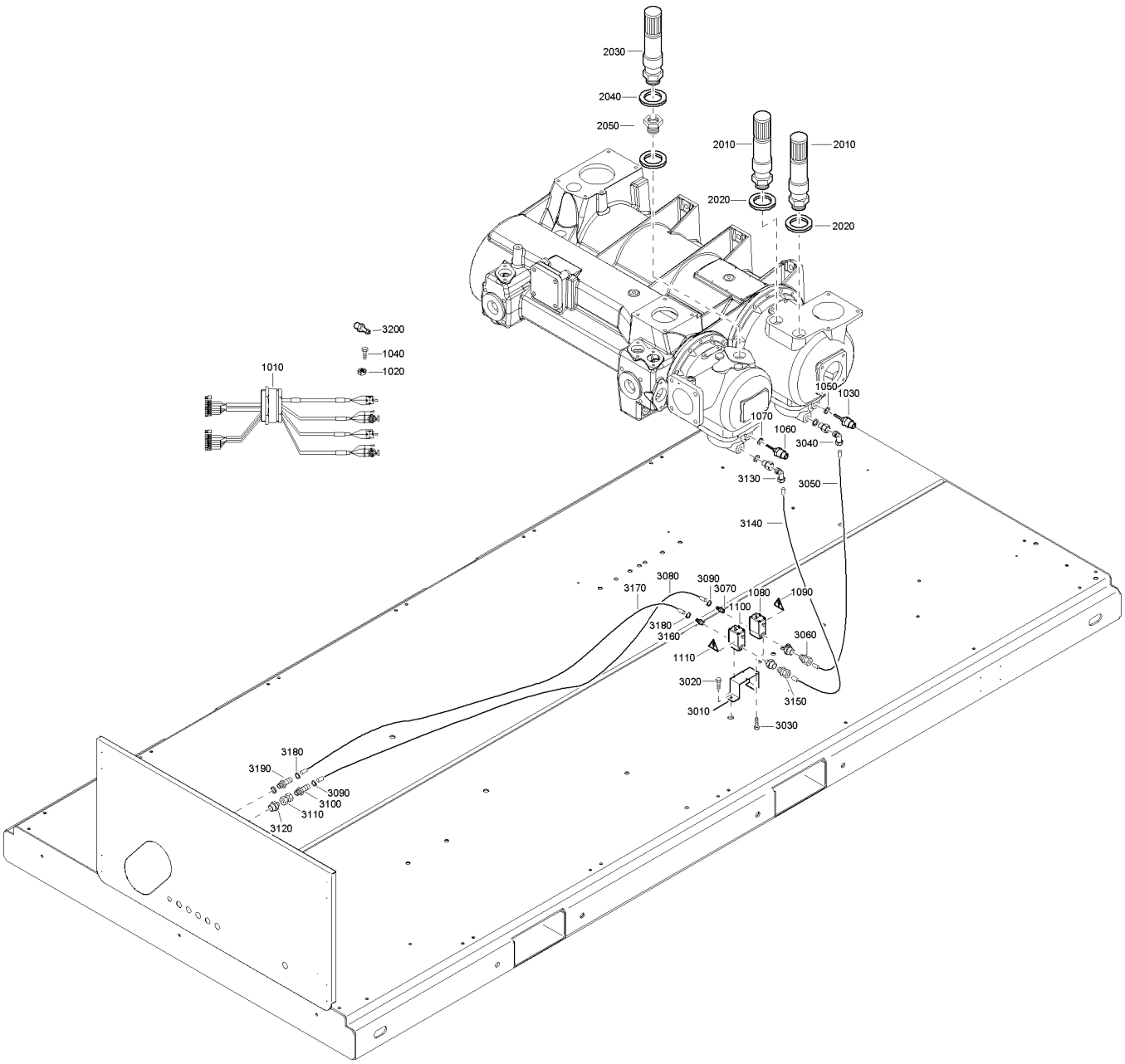
2030
2040
2050
2010
2010
2020
2020
3200
1040
1020
1010
1050
1030
1070
1060
3040
3130
3050
3140
3080
3090
3170
3070
1080
1090
1100
3180
3160
3060
1110
3020
3150
3010
3030
3180
3190
3090
3100
3110
3120

Drain system - ZR

17

Ref.	Part number	Qty	Name	Remarks
3060	0581 0001 41	1	Pipe coupling	
3070	0571 0020 23	1	Hose nipple	
3080	0075 4005 56	AR	Hose	
3090	0347 6103 00	2	Hose clip	
3100	0571 0020 38	1	Hose nipple	
3110	8204 0940 34	1	Valve	
3120	1503 2564 04	1	Nipple	
3130	0581 1200 29	1	Pipe coupling	
3140	0070 6002 06	AR	Nylon tube	
3150	0581 0001 41	1	Pipe coupling	
3160	0571 0020 23	1	Hose nipple	
3170	0075 4005 56	AR	Hose	
3180	0347 6103 00	2	Hose clip	
3190	0571 0020 38	1	Hose nipple	
3200	0571 0020 23	2	Hose nipple	

18

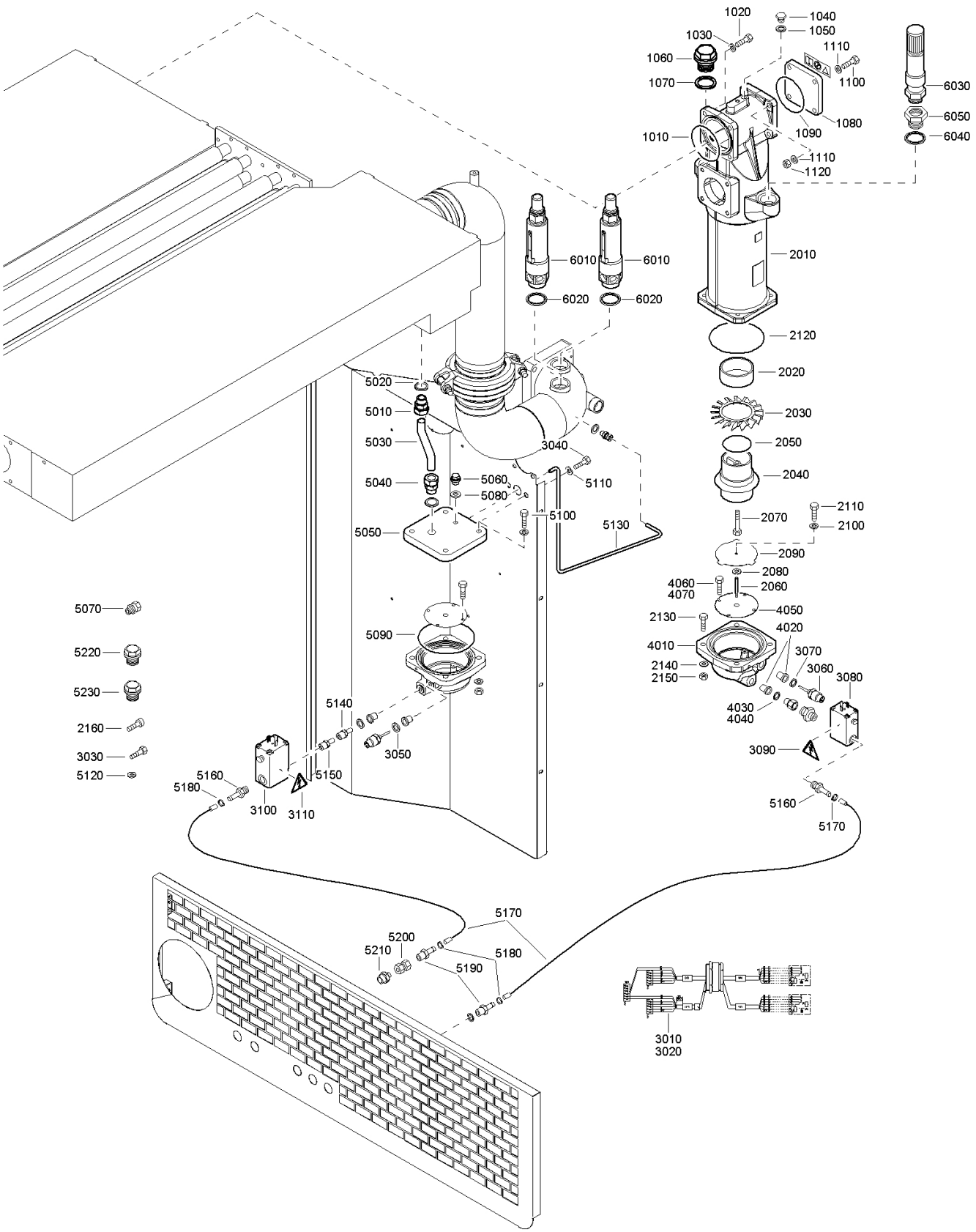
1020
1040
1050
1030
1110
1060
1100
1070
6030
6050
1080
1090
6040
1010
1110
1120
6010
6010
2010
6020
6020
2120
2020
5020
5010
2030
5030
3040
2050
5040
5060
5110
2040
5080
5100
2110
2070
2100
5050
5130
2090
2080
4060
4070
2060
5070
4050
2130
4020
5090
4010
3070
5220
2140
3060
3080
2150
5230
5140
4030
4040
2160
3050
3090
3030
5120
5150
5160
5180
3100
3110
5160
5170
5170
5200
5210
5180
5190
3010
3020

Drain system - ZT

Ref.	Part number		Qty	Name	Remarks
				Water separator complete	
1010	0663 2107 33		1	O-Ring	
1020	0211 1403 00		4	Hex.socket cap screw	
1030	0301 2358 00		4	Plain washer	
1040	0686 3716 30		1	Plug	
1050	0661 1000 25		1	Seal washer	
1060	0686 3716 10		1	Plug	
1070	0661 1000 32		1	Seal washer	
1080	1621 2354 00		1	Flange	
1090	0663 2107 33		1	O-Ring	
1100	0147 1407 03		4	Hex.bolt	
1110	0301 2358 00		8	Plain washer	
1120	0266 2112 00		4	Hexagon nut	
	1623 1855 81		**1**	**Housing**	
2010		•	1	Valve housing	
2020	1621 3238 00	•	1	Spacer	
2030	1614 6516 00	•	1	Swirler	
2040	1621 3487 00	•	1	Impinger	
2050	0663 6140 00	•	1	O-Ring	
2060	0147 1383 03	•	1	Hex.bolt	
2070	1621 5087 00	•	1	Rod	
2080	0301 2121 01	•	1	Plain washer	
2090	1621 5086 00	•	1	Plate	
2100	0301 2121 01	•	1	Plain washer	
2110	0147 1962 65	•	1	Hex.bolt	
2120	0663 2108 94	•	1	O-Ring	
2130	0147 1407 03	•	4	Hex.bolt	
2140	0301 2358 00	•	8	Plain washer	
2150	0266 2112 00	•	4	Hexagon nut	
2160	0147 1107 04	•	1	Screw	
	2000 0227 65		**1**	**Elec.system**	
3010	1621 6934 01	•	1	Wiring for drain	
3020	0697 9809 06	•	1	Lock nut	
3030	0147 1320 03	•	1	Hex.bolt	
3040	0147 1320 03	•	1	Hex.bolt	
3050	0661 1000 25	•	1	Seal washer	
3060	1089 0659 57	•	2	Sensor	
3070	0661 1000 25	•	1	Seal washer	
3080	1089 9439 18	•	1	Valve	
3090	1088 1001 01	•	1	Warning mark	
3100	1089 9439 16	•	1	Valve	
3110	1088 1001 01	•	1	Warning mark	
	1621 4396 80		**1**	**Cover for coolers**	
4010		•	1	Cover for cooler	
4020	1621 7941 00	•	1	Bushing	
4030	0661 1000 27	•	1	Seal washer	
4040	0661 1000 27	•	1	Seal washer	
4050	1621 4418 00	•	1	Plate	
4060	0147 1962 65	•	4	Hex.bolt	
4070	0147 1962 65	•	4	Hex.bolt	

Ref.	Part number	Qty	Name	Remarks
			Drain pipes complete	
5010	0580 0014 43	1	Pipe coupling	
5020	0661 1000 29	1	Washer	
5030	1621 5228 00	1	Pipe for drains	
5040	0580 0014 43	1	Pipe coupling	
5050	1621 5227 00	1	Cover	
5060	0686 4202 03	1	Plug	
5070	0581 0034 01	1	Pipe coupling	
5080	0661 1000 29	1	Washer	
5090	0663 2108 94	4	O-Ring	
5100	0147 1408 03	8	Bolt	
5110	0303 1274 01	2	Plain washer	
5120	0661 1000 27	2	Seal washer	
5130	1621 7656 00	1	Pipe	
5140	0581 0000 72	1	Male adapter	
5150	0581 0000 72	2	Male adapter	
5160	0571 0020 23	1	Hose nipple	
5170	0075 4005 56	AR	Hose	
5180	0347 6103 00	2	Hose clip	
5190	0571 0020 38	1	Hose nipple	
5200	8204 0940 34	1	Valve	
5210	1503 2564 04	1	Nipple	
5220	0686 9130 00	2	Hex.plug	
5230	0686 3716 04	1	Plug	
			With aftercooler	
5070	0581 0034 01	1	Pipe coupling	
5160	0571 0020 23	1	Hose nipple	
5170	0075 4005 56	AR	Hose	
5180	0347 6103 00	2	Hose clip	
5190	0571 0020 38	1	Hose nipple	
			ZT 275 7.5 bar(e)	
			275KW,6.6KV S	
			ZT275 7.5 bar(e)	
			275KW,3.3KV S	
			ZT275 8.6 bar(e)	
			275KW,3.3KV S	
			ZT275 8.6 bar(e)	
			275KW,6.6KV S	
			Safety valve complete	
6010	0830 1008 23	2	Safety valve	
6020	0661 1000 32	2	Seal washer	
6030	0830 1008 09	1	Safety valve	
6040	0661 1000 32	1	Seal washer	
6050	0605 8700 75	1	Bushing	
			ZT160 10 bar(e)	
			160KW,3.3KV S	
			ZT160 10 bar(e)	
			160KW,6.6KV S	
			ZT200 10 bar(e)	
			200KW,6.6KV S	

18

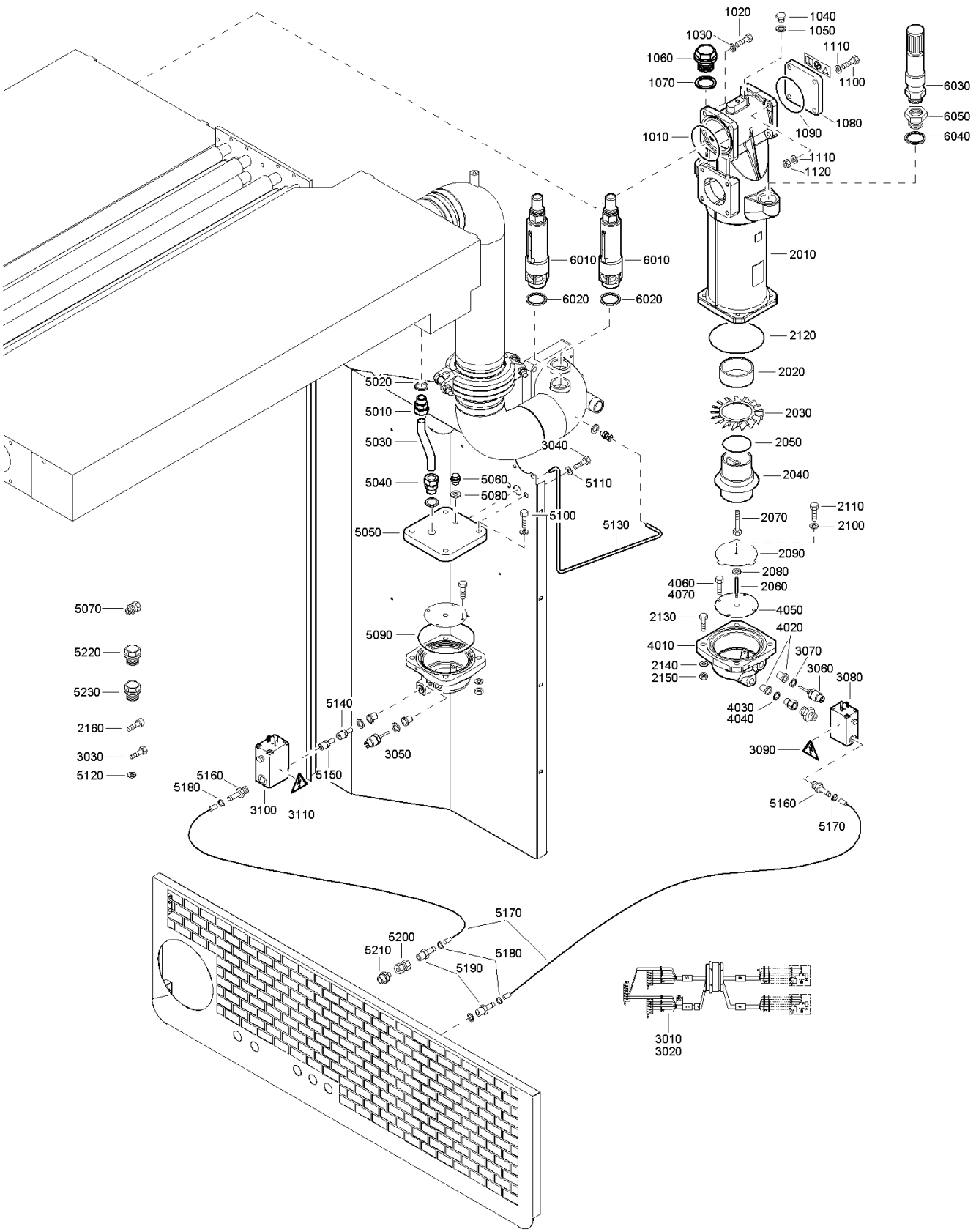
1020
1040
1050
1030
1110
1060
1100
1070
6030
6050
1080
1090
6040
1010
1110
1120
6010
6010
2010
6020
6020
2120
2020
5020
5010
2030
5030
3040
2050
5040
5060
5110
2040
5080
5100
2110
2070
2100
5130
5050
2090
2080
4060
4070
2060
5070
4050
2130
4020
5090
4010
3070
5220
2140
3060
3080
2150
5230
5140
4030
4040
2160
3050
3090
3030
5150
5120
5160
5180
3100
3110
5160
5170
5170
5200
5210
5180
5190
3010
3020

Drain system - ZT

18

Ref.	Part number	Qty	Name	Remarks
			ZT 200 10 bar(e) 200KW,3.3KV S	
			ZT250 10 bar(e) 250KW,3.3KV S	
			ZT250 10 bar(e) 250KW,6.6KV S	
			ZT275 10 bar(e) 275KW,3.3KV S	
			ZT275 10 bar(e) 275KW,6.6KV S	
			Safety valve complete	
6010	0830 1008 23	2	Safety valve	
6020	0661 1000 32	2	Seal washer	
6030	0830 1008 13	1	Safety valve	
6040	0661 1000 32	1	Seal washer	
6050	0605 8700 75	1	Bushing	
			ZT160 7.5 bar(e) 160KW,3.3KV S	
			ZT160 7.5 bar(e) 160KW,6.6KV S	
			ZT160 8.6 bar(e) 160KW,3.3KV S	
			ZT160 8.6 bar(e) 160KW,6.6KV S	
			ZT200 7.5 bar(e) 200KW,3.3KV S	
			ZT200 7.5 bar(e) 200KW,6.6KV S	
			ZT200 8.6 bar(e) 200KW,3.3KV S	
			ZT200 8.6 bar(e) 200KW,6.6KV S	
			Safety valve complete	
6010	0830 1008 23	2	Safety valve	
6020	0661 1000 32	2	Seal washer	
6030	0830 1008 08	1	Safety valve	
6040	0661 1000 31	1	Washer	
6050	0605 8400 19	1	Bushing	
			ZT250 7.5 bar(e) 250KW,3.3KV S	
			ZT250 7.5 bar(e) 250KW,6.6KV S	
			ZT250 8.6 bar(e) 250KW,3.3KV S	
			ZT250 8.6 bar(e) 250KW,6.6KV S	
			Safety valve complete	
6010	0830 1008 23	2	Safety valve	
6020	0661 1000 32	2	Seal washer	
6030	0830 1008 09	1	Safety valve	
6040	0661 1000 32	1	Seal washer	
6050	0605 8400 19	2	Bushing	

19

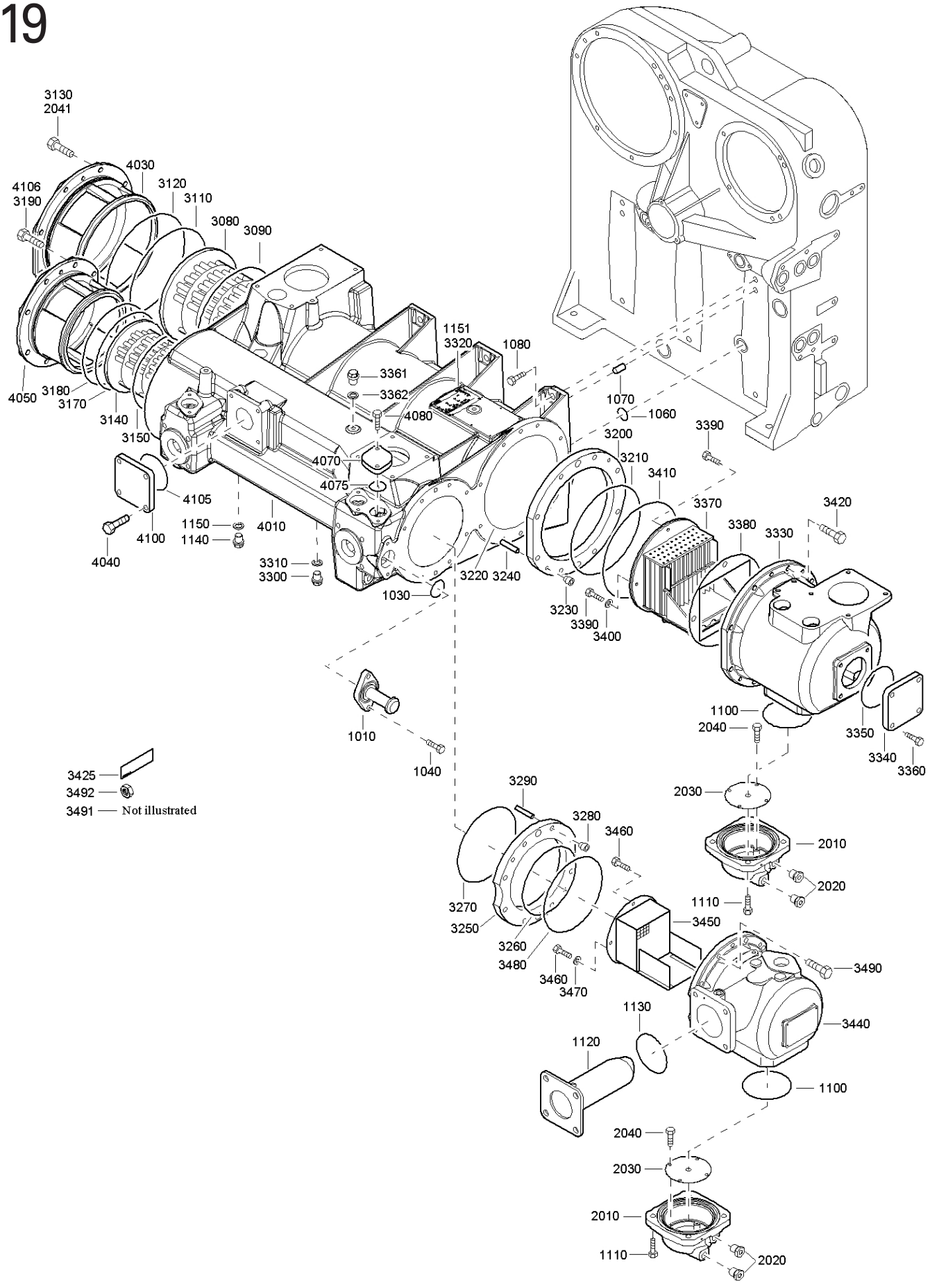
3130
2041
4030
4106
3190
3120
3110
3080
3090
4050
3180
3170
3140
3150
4105
4100
4040
1150
1140
4010
3310
3300
1151
3320
1080
3361
3362
4080
4070
4075
1030
3220
3240
1070
1060
3390
3200
3210
3410
3370
3380
3330
3420
3230
3390
3400
1100
2040
3350
3340
3360
1010
1040
3425
3492
3491 — Not illustrated
3290
3280
3460
3270
3250
3260
3480
3460
3470
2030
2010
2020
1110
3450
3490
3440
1130
1120
1100
2040
2030
2010
1110
2020

Coolers - ZR

Ref.	Part number		Qty	Name	Remarks
1010	1621 3289 00		1	Cover	
1030	0663 2108 00		1	O-Ring	
1040	0147 1363 03		2	Hex.bolt	
1060	0663 2107 81		1	O-Ring	
1070	9096 4104 00		2	Pin	
1080	0147 1477 00		6	Hex.bolt	
1100	0663 2108 94		2	O-Ring	
1110	0147 1962 30		8	Hex.bolt	
1120	9096 4165 00		1	Pipe	
1130	0663 6147 00		1	O-Ring	
1140	0686 3716 04		3	Plug	
1150	0661 1000 25		3	Seal washer	
1151	0244 4184 00		4	Round head drive screw	
	1621 4396 80		**2**	**Cover for coolers**	
2010		•	1	Cover for cooler	
2020	1621 7941 00	•	1	Bushing	
	0661 1000 27	•	1	Seal washer	
	0661 1000 27	•	1	Seal washer	
2030	1621 4418 00	•	1	Plate	
2040	0147 1962 65	•	4	Hex.bolt	
2041	0147 1962 65	•	4	Hex.bolt	
3080	1621 7003 08		1	Cooler core	
3090	0663 2107 53		1	O-Ring	
3110	0663 2107 54		1	O-Ring	
3120	0663 2107 55		1	O-Ring	
3130	0147 1962 31		8	Hex.bolt	
3140	1621 7002 08		1	Cooler core	
3150	0663 2107 48		1	O-Ring	
3170	0663 2107 51		1	O-Ring	
3180	0663 2107 52		1	O-Ring	
3190	0147 1962 31		8	Hex.bolt	
3200	1621 4076 00		1	Seal ring	
3210	0663 2107 57		1	O-Ring	
3220	0663 2107 56		1	O-Ring	
3230	1621 0528 00		2	Ring	
3240	0101 1951 51		2	Pin	
3250	1621 4077 00		1	Seal ring	
3260	0663 2107 58		1	O-Ring	
3270	0663 2106 95		1	O-Ring	
3280	1621 0528 00		2	Ring	
3290	0101 1951 51		2	Pin	
3300	0686 3716 04		5	Plug	
3310	0661 1000 25		5	Seal washer	
3320	0244 4184 00		4	Round head drive screw	
3330	1621 1397 02		1	Water seperator	
3340	1621 3330 02		1	Cover	
3350	0663 2107 25		1	O-Ring	
3360	0147 1962 31		4	Hex.bolt	
3361	0686 3716 04		2	Plug	
3362	0661 1000 25		2	Seal washer	
3370	1621 5361 00		1	Water seperator	
3380	1621 3527 00		1	Gasket	
3390	0147 1323 02		4	Hex head screw	
3400	0301 2135 01		1	Washer	
3410	0663 2107 56		1	O-Ring	
3420	0147 1962 33		8	Hex.bolt	
3425	1079 9905 49		1	Lable	
3440	1621 1435 02		1	Water separator	
3450	1621 3556 00		1	Water separator	
3460	0147 1960 58		4	Hex.bolt	
3470	0301 2135 01		1	Washer	
3480	0663 2106 95		1	O-Ring	
3490	0147 1962 33		6	Hex.bolt	
3491	0246 1955 39		2	Stud	
3492	0261 1090 65		2	Hex.nut	
4010	**1621 3151 10**		**1**	**Cooler shell**	
4030	1621 3154 10		1	Cover i/c	
4040	0147 1962 31		4	Hex.bolt	
4050	1621 3155 10		1	Cover a/c	
4070	1621 3071 00		3	Cover	
4075	0663 2107 86		3	O-Ring	
4080	0147 1962 29		6	Hex.bolt	
4100	1621 3059 00		1	Cover	
4105	0663 2107 25		1	O-Ring	
4106	0147 1402 03		4	Hex. head screw	

20

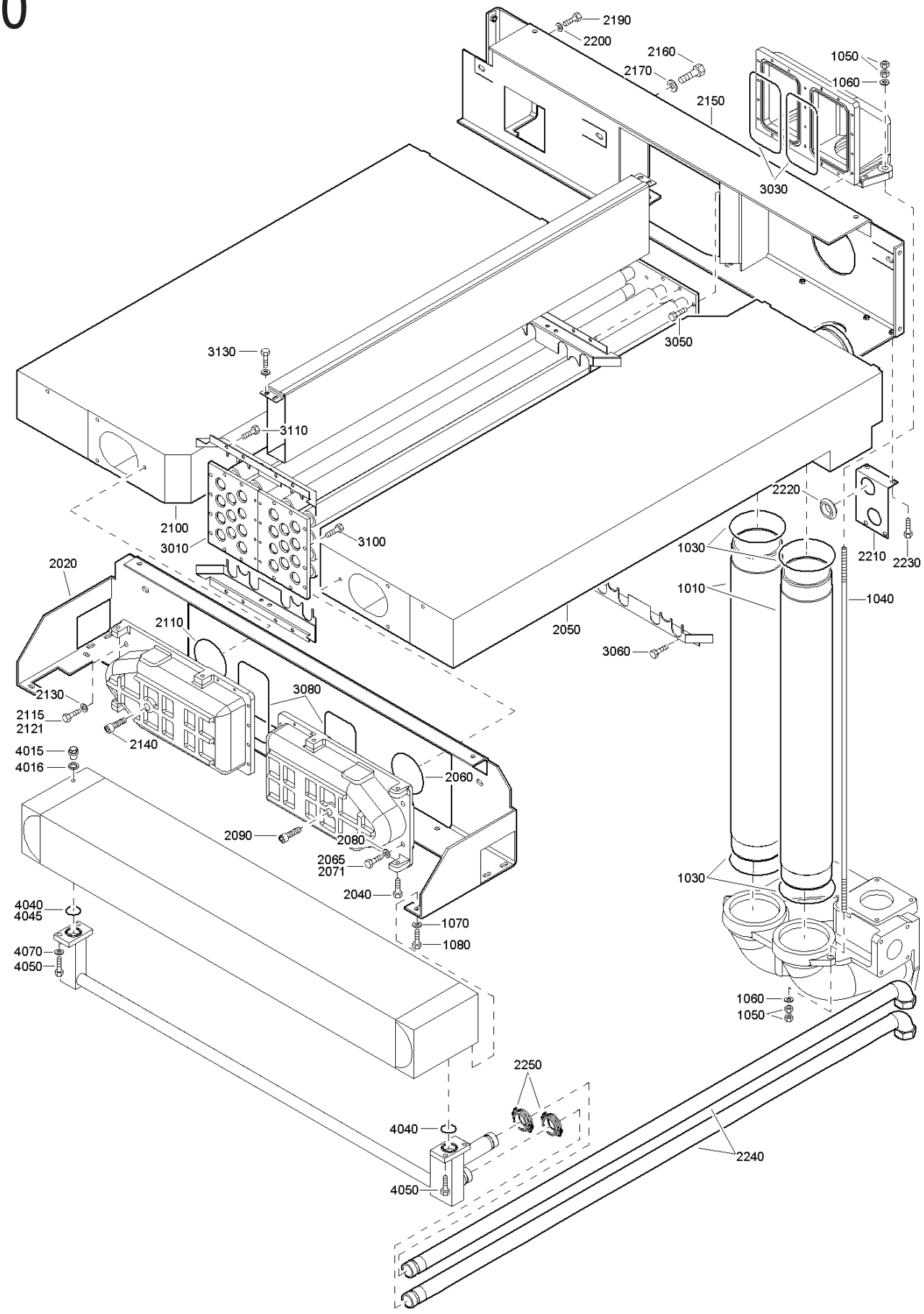
2190
2200
2160
2170
2150
1050
1060
3030
3050
3130
3110
2100
3010
3100
2020
2110
2130
2115
2121
2140
3080
4015
4016
2060
2090
2080
2065
2071
2040
4040
4045
4070
4050
1070
1080
2250
4040
4050
2240
2220
2210
2230
1030
1010
1040
2050
3060
1030
1060
1050

Coolers - ZT

20

Ref.	Part number	Qty	Name	Remarks
1010	9096 4381 00	2	Pipe	
1030	0663 2107 14	1	O-Ring	
1040	1621 2777 00	2	Tie rod	
1050	0266 2112 00	8	Hexagon nut	
1060	0301 2358 00	4	Plain washer	
1070	0147 1360 03	8	Hex. head screw	
1080	0301 2344 00	8	Plain washer	
2020	1621 2778 00	1	Support	
2040	0147 1401 03	4	Hex bolt	
2050	1621 2795 00	1	Inter cooler	
2060	0663 2108 26	1	O-Ring	
2065	0147 1403 03	2	Hex.bolt	
2071	0147 1402 03	1	Hex. head screw	
2080	0301 2358 00	1	Plain washer	
2090	0211 1964 75	1	Hex.cap screw	
2100	1621 2796 00	1	After cooler	
2110	0663 2108 26	1	O-Ring	
2115	0147 1403 03	2	Hex.bolt	
2121	0147 1402 03	1	Hex. head screw	
2130	0301 2358 00	1	Plain washer	
2140	0211 1964 75	1	Hex.cap screw	
2150	1621 2779 00	1	Support	
2160	0147 1402 03	6	Hex. head screw	
2170	0301 2358 00	6	Plain washer	
2190	0147 1360 03	4	Hex. head screw	
2200	0301 2344 00	2	Plain washer	
2210	1621 2780 00	1	Plate	
2220	1088 0801 53	2	Gromet type a	
2230	1619 5337 01	2	Paint stripping bolt	
2240	1623 6191 00	2	Pipe	
2250	0634 1001 09	2	Pipe coupl. Victaulic	
3010	1621 2797 80	1	Coolers	
3030	0663 2106 95	2	O-Ring	
3050	0147 1326 03	12	Hex.bolt	
3060	0147 1325 03	8	Hex.bolt	
3080	0663 2106 95	2	O-Ring	
3100	0147 1326 03	16	Hex.bolt	
3110	0211 1325 03	8	Screw	
3130	0147 1320 03	4	Hex.bolt	
4015	0686 3716 04	1	Plug	
4016	0661 1000 25	1	Seal washer	
4040	0663 2133 00	1	O-Ring	
4045	0663 2133 00	1	O-Ring	
4050	0147 1363 03	4	Hex.bolt	
4070	0301 2344 00	2	Plain washer	

21

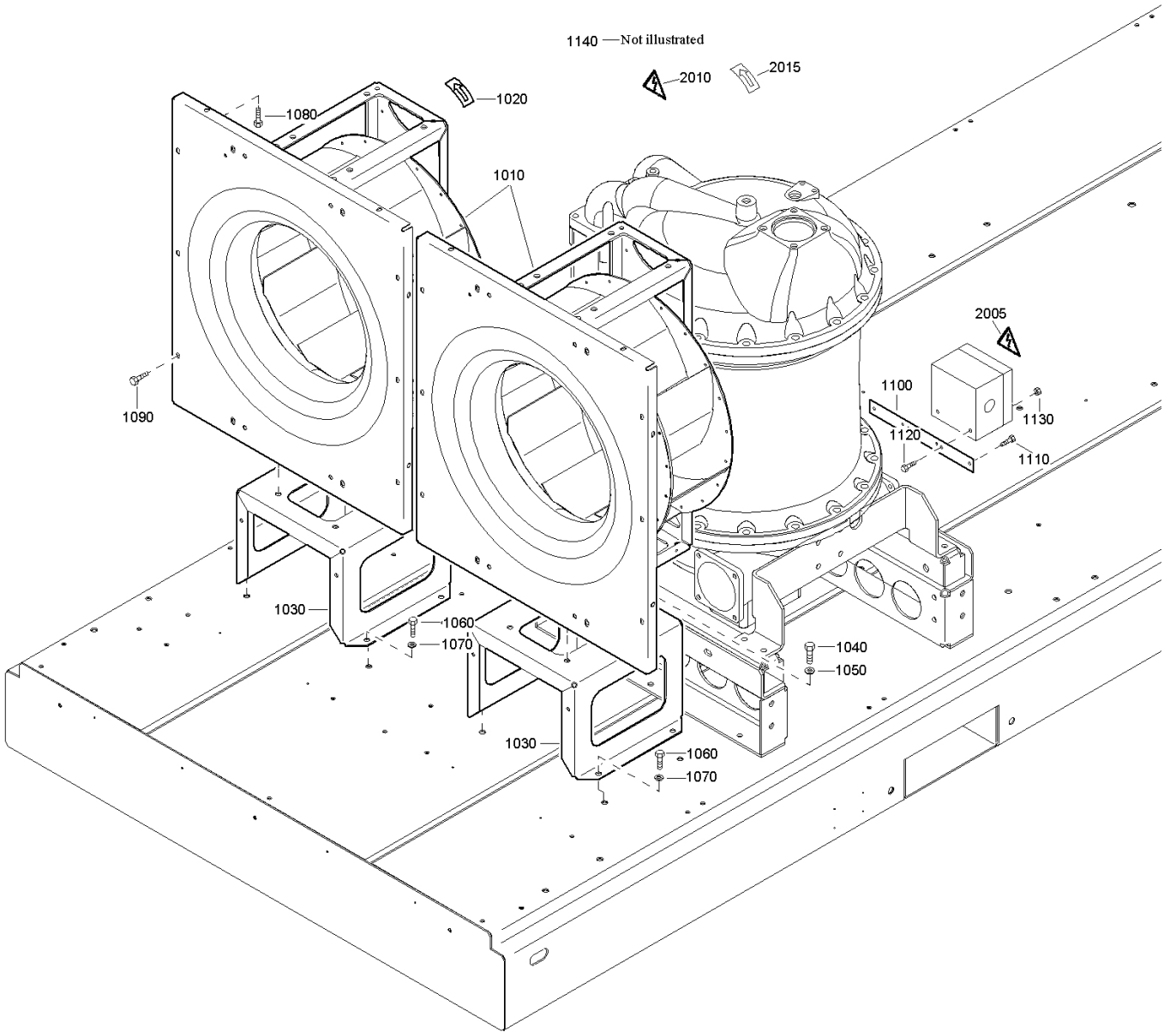
1140 —Not illustrated
2010
2015
1020
1080
1010
2005
1100
1130
1120
1110
1090
1030
1060
1070
1040
1050
1030
1060
1070

Coolers - cooling system - ZT

21

Ref.	Part number	Qty	Name	Remarks
1010	1623 9863 08	2	Fan radial	
1020	1503 0786 00	2	Rotation arrow	
1030	1621 2447 00	2	Support	
1040	0147 1400 03	8	Hex. head screw	
1050	0301 2358 00	8	Plain washer	
1060	0147 1400 03	8	Hex. head screw	
1070	0301 2358 00	8	Plain washer	
1080	1619 2766 00	2	Paint stripping bolt	
1090	1619 2766 00	2	Paint stripping bolt	
1100	1621 2530 00	1	Strip	
1110	1619 2766 00	2	Paint stripping bolt	
1120	0147 1249 00	2	Hex.bolt	
1130	0266 2108 00	2	Hex.nut	
1140	2000 0225 29	1	Cale box	
			Kit-decal	
2005	1088 1001 02	1	Warning mark	
2010	1088 1001 04	3	Warning mark	
2015	1503 0786 00	2	Rotaion arrow	

22

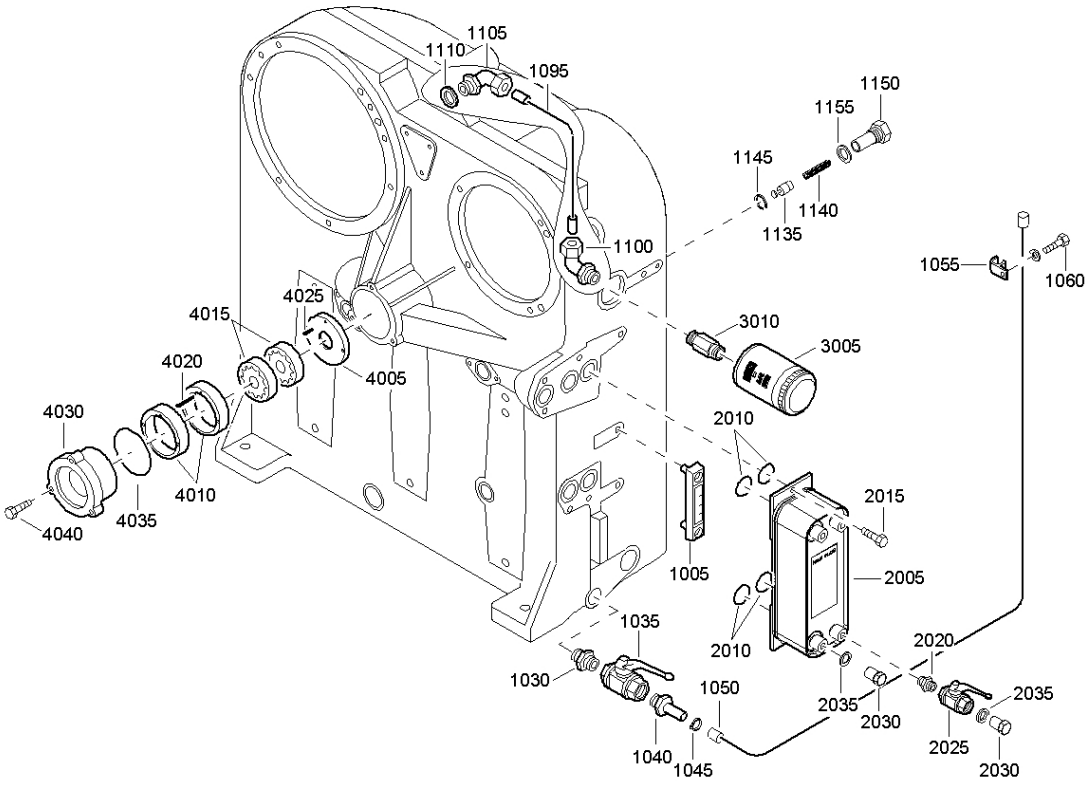
1105
1110
1095
1150
1155
1145
1140
1135
1100
1055
1060
4025
4015
3010
3005
4020
4005
2010
4030
2015
4010
4035
4040
1005
2005
1035
2010
2020
1030
1050
2035
2035
2030
1040
1045
2025
2030

Oil system - ZR

22

Ref.	Part number		Qty	Name	Remarks
1005	**1616 5537 00**		**1**	**Level indicator**	
	0663 2104 37	•	4	O-Ring	
1030	0603 5115 03		1	Hex.nipple	
1035	1619 6153 05		1	Ball valve	
1040	0571 0020 17		1	Hose nipple	
1045	0347 6105 00		1	Hose clamp	
1050	0075 4005 51		AR	Hose	
1055	1613 2685 00		1	Hose support	
1060	0147 1323 00		1	Hex.bolt	
1095	1621 3116 00		1	Pipe	
1100	0581 2024 34		1	Male coupling	
1105	0580 2501 42		1	Elbow coupling	
1110	0661 1000 29		1	Washer	
1135	1621 0383 00		1	Valve	
1140	1621 7254 00		1	Spring	
1145	0335 2120 00		1	Circlip	
1150	1621 0137 00		1	Plug	
1155	0661 1000 29		1	Washer	

Ref.	Part number	Qty	Name	Remarks
2005	1623 7121 00	1	Oil cooler	
2010	0663 2107 81	4	O-Ring	
2015	0147 1323 00	3	Hex.bolt	
2020	0603 4102 00	1	Hex.nipple	
2025	8202 0310 04	1	Ball valve	
2030	0686 3716 04	4	Plug	
2035	0661 1000 25	4	Seal washer	
			Oil system complete	
3005	1614 8747 00	1	Oil filter	
3010	1621 4024 00	1	Nipple	
4005	1616 5439 00	1	Distance ring	
4010	1621 5783 00	2	Eccentric ring	
4015	1616 6127 00	2	Pump element	
4020	0101 1951 36	1	Pin	
4025	0102 0244 00	1	Pin	
4030	1616 6461 00	1	Pump cover	
4035	0663 2106 16	1	O-Ring	
4040	0147 1327 03	3	Hex.bolt	

23

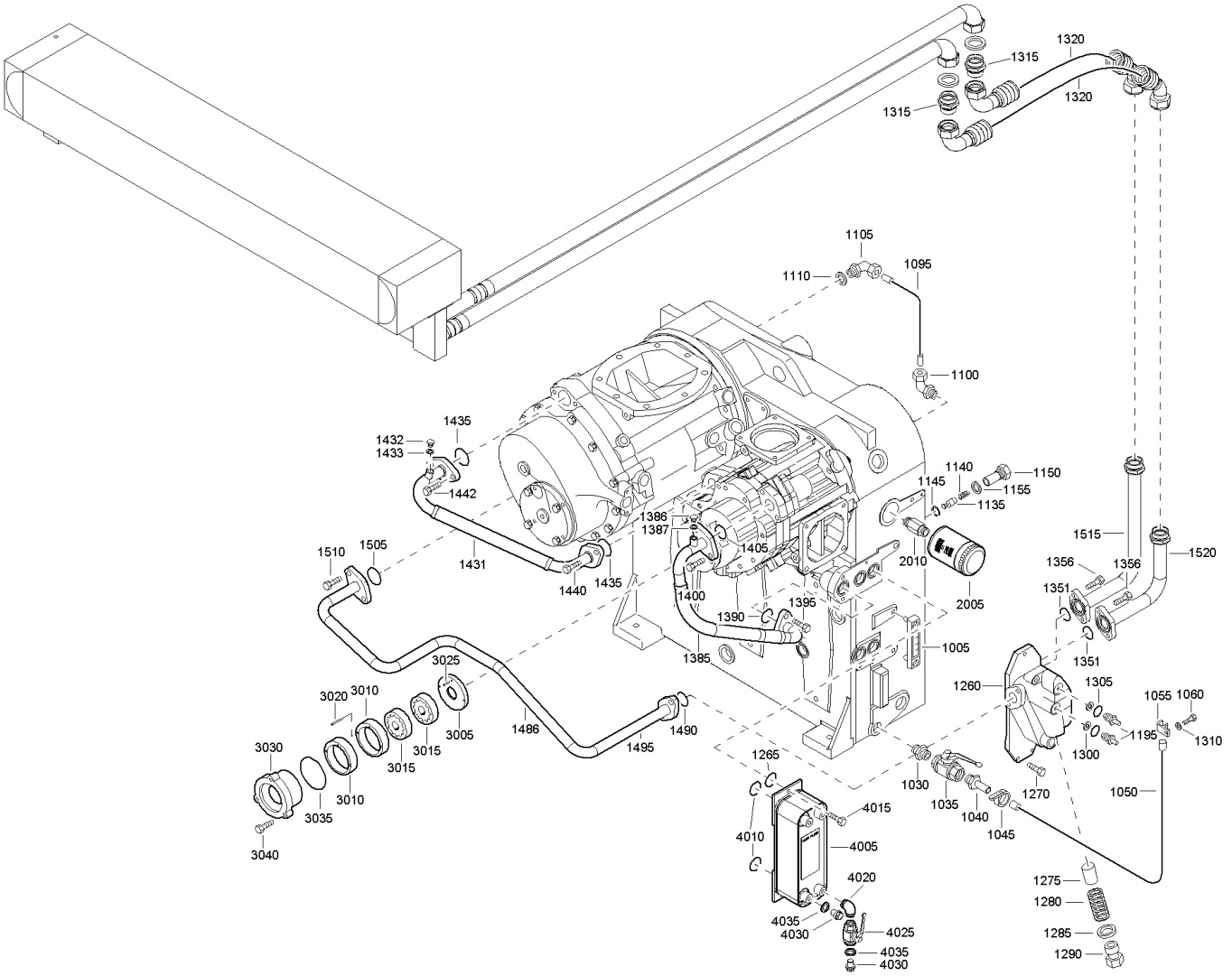
1320
1315
1315
1320
1105
1110
1095
1100
1435
1432
1433
1442
1431
1440
1435
1386
1387
1405
1400
1395
1390
1385
1005
1140
1145
1150
1155
1135
2010
2005
1515
1520
1356
1356
1351
1351
1510
1505
1260
1305
1055
1060
1195
1310
1300
1030
1035
1040
1045
1270
1050
1265
4015
4010
4005
4020
4035
4030
4025
4035
4030
1275
1280
1285
1290
3025
3020
3010
3005
3030
3015
3015
3010
3035
3040
1486
1490
1495

Oil system - ZT

Ref.	Part number		Qty	Name	Remarks
1005	**1616 5537 00**		**1**	**Level indicator**	
	0663 2104 37	•	4	O-Ring	
1030	0603 5115 03		1	Hex.nipple	
1035	1619 6153 05		1	Ball valve	
1040	0571 0020 17		1	Hose nipple	
1045	0347 6105 00		1	Hose clamp	
1050	0075 4005 51		AR	Hose	
1055	1613 2685 00		1	Hose support	
1060	0147 1323 00		1	Hex.bolt	
1095	1621 3116 00		1	Pipe	
1100	0581 2024 34		1	Male coupling	
1105	0580 2501 42		1	Elbow coupling	
1110	0661 1000 29		1	Washer	
1135	1621 0383 00		1	Valve	
1140	1621 7254 00		1	Spring	
1145	0335 2120 00		1	Circlip	
1150	1621 0137 00		1	Plug	
1155	0661 1000 29		1	Washer	
1195	1621 3219 00		3	Drain plug	
1260	1621 3783 00		1	Housing	
1265	0663 2107 81		3	O-Ring	
1270	0147 1326 03		3	Hex.bolt	
1275	2255 0831 00		1	Valve	
1280	1621 2960 00		1	Spring	
1285	0661 1000 30		1	Seal washer	
1290	2255 0833 03		1	Plug	
1300	0653 1100 00		3	Copper washer	
1305	0663 3125 00		3	O-Ring	
1310	0661 1000 31		2	Washer	
1315	9096 4491 00		2	Nipple	
1320	9096 4490 00		2	Flexible pipe	
1351	0663 2107 90		2	O-Ring	
1356	0147 1363 03		4	Hex.bolt	
1385	1621 9553 00		1	Pipe	
1386	0686 3716 44		1	Hexagon plug	
1387	0661 1000 25		1	Seal washer	
1390	0663 2107 86		1	O-Ring	
1395	0147 1962 30		2	Hex.bolt	
1400	0147 1412 00		2	Hex.bolt	
1405	0663 2107 81		1	O-Ring	
1431	1621 9554 00		1	Pipe	
1432	0686 3716 44		1	Hexagon plug	
1433	0661 1000 25		1	Seal washer	
1435	0663 2107 86		2	O-Ring	
1440	0147 1412 00		2	Hex.bolt	
1442	0147 1413 00		2	Hex.bolt	
1486	1621 4150 00		1	Pipe	
1490	0663 2107 90		1	O-Ring	
1495	0147 1363 03		2	Hex.bolt	
1505	0663 2107 86		1	O-Ring	
1510	0147 1413 00		2	Hex.bolt	
1515	9096 4489 00		1	Pipe	
1520	9096 4488 00		1	Pipe	
				Oil system complete	
2005	1614 8747 00		1	Oil filter	
2010	1621 4024 00		1	Nipple	
3005	1616 5439 00		1	Distance ring	
3010	1621 5783 00		2	Eccentric ring	
3015	1616 6127 00		2	Pump element	
3020	0101 1951 36		1	Pin	
3025	0102 0244 00		1	Pin	
3030	1616 6461 00		1	Pump cover	
3035	0663 2106 16		1	O-Ring	
3040	0147 1327 03		3	Hex.bolt	

24

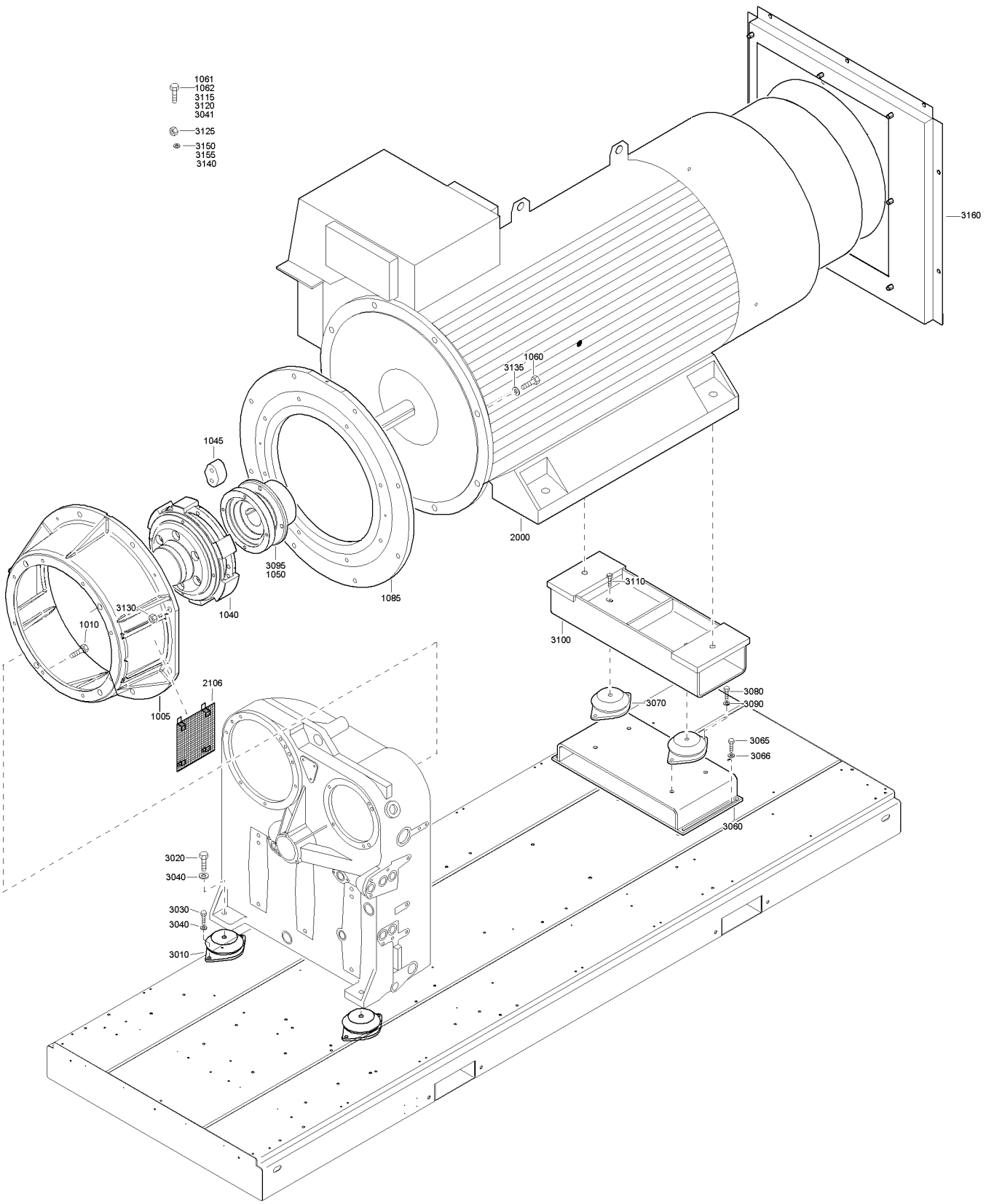
1061
1062
3115
3120
3041
3125
3150
3155
3140
3160
1060
3135
1045
2000
3095
1050
1085
3110
3130
1040
1010
3100
2106
1005
3080
3090
3070
3065
3066
3060
3020
3040
3030
3040
3010

Drive arrangement

Ref.	Part number	Qty	Name	Remarks
			ZR160 7.5 bar(e) 190KW/ 3.3KV O	
			ZR160 8.6 bar(e) 190KW/ 3.3KV O	
			Drive arrg.complete with 190kw	
1005	1621 1428 00	1	Coupling housing	
1010	0147 1405 03	8	Hex.bolt	
1040	1621 1534 02	1	Coupling half	
1045	1619 6467 04	1	Set-rubbers	
1050	1621 1535 01	1	Coupling half	
1060	0147 1554 00	8	Hex.bolt	
1062	0147 1554 00	2	Hex.bolt	
1085	9096 4731 13	1	Reducing ring	
2000	9096 4997 00	1	Motor	
2106	1621 1673 00	2	Guard	
3010	9096 4671 00	2	Anti vibration mount	
3020	0147 1962 35	2	Hex.bolt	
3030	0147 1400 00	4	Hex.bolt	
3040	0301 2358 00	4	Plain washer	
3060	1621 3148 00	1	Support	
3065	0147 1401 00	4	Hex.bolt	
3066	0300 0274 92	4	Washer	
3070	9096 3915 00	2	Rubber buffer	
3080	0147 1400 00	4	Hex.bolt	
3090	0301 2358 00	4	Plain washer	
3095	9096 3690 07	1	Coupling - Motor.	
3100	9096 4948 00	1	Motor support	
3110	0147 1413 00	2	Hex.bolt	
3115	0147 1480 00	2	Hex.bolt	
3120	0147 1480 00	1	Hex.bolt	
3125	0261 1090 51	2	Hex.nut	
3130	0266 2114 00	2	Hexagon nut	
3135	0301 2378 00	2	Plain washer	
3140	0301 2378 00	1	Plain washer	
3145	0301 2393 00	2	Plain washer	
3150	0301 2358 00	2	Plain washer	
3155	0333 2149 00	2	Spring washer	
			ZR160 8.6 bar(e) 175KW/ 3.3KV O	
			ZR160 10 bar(e) 175KW/ 3.3KV O	
			Drive arrg.complete with 175kw	
1005	1621 1428 00	1	Coupling housing	
1010	0147 1405 03	8	Hex.bolt	
1040	1621 1534 02	1	Coupling half	
1045	1619 6467 04	1	Set-rubbers	
1050	1621 1535 01	1	Coupling half	
1060	0147 1554 00	8	Hex.bolt	
1062	0147 1554 00	2	Hex.bolt	
1085	9096 4731 13	1	Reducing ring	
2000	9096 4996 00	1	Motor	
2106	1621 1673 00	2	Guard	
3010	9096 4671 00	2	Anti vibration mount	
3020	0147 1962 35	2	Hex.bolt	
3030	0147 1400 00	4	Hex.bolt	
3040	0301 2358 00	4	Plain washer	
3060	1621 3148 00	1	Support	
3065	0147 1401 00	4	Hex.bolt	
3066	0300 0274 92	4	Washer	
3070	9096 3915 00	2	Rubber buffer	
3080	0147 1400 00	4	Hex.bolt	
3090	0301 2358 00	4	Plain washer	
3095	9096 3690 07	1	Coupling	
3100	9096 4948 00	1	Motor support	
3110	0147 1413 00	2	Hex.bolt	
3115	0147 1480 00	2	Hex.bolt	
3120	0147 1480 00	1	Hex.bolt	
3125	0261 1090 51	2	Hex.nut	
3130	0266 2114 00	2	Hexagon nut	
3135	0301 2378 00	2	Plain washer	
3140	0301 2378 00	1	Plain washer	
3145	0301 2393 00	2	Plain washer	
3150	0301 2358 00	2	Plain washer	
3155	0333 2149 00	2	Spring washer	
			ZR160 10 bar(e) 165KW/ 3.3KV O	
			Drive arrg.complete with 165kw	
1005	1621 1428 00	1	Coupling housing	
1010	0147 1405 03	8	Hex.bolt	
1040	1621 1534 02	1	Coupling half	
1045	1619 6467 04	1	Set-rubbers	
1050	1621 1535 01	1	Coupling half	
1060	0147 1554 00	8	Hex.bolt	
1062	0147 1554 00	2	Hex.bolt	
1085	9096 4731 13	1	Reducing ring	
2000	9096 4995 00	1	Motor	
2106	1621 1673 00	2	Guard	
3010	9096 4671 00	2	Anti vibration mount	
3020	0147 1962 35	2	Hex.bolt	
3030	0147 1400 00	4	Hex.bolt	
3040	0301 2358 00	4	Plain washer	
3060	1621 3148 00	1	Support	
3065	0147 1401 00	4	Hex.bolt	
3066	0300 0274 92	4	Washer	
3070	9096 3915 00	2	Rubber buffer	
3080	0147 1400 00	4	Hex.bolt	
3090	0301 2358 00	4	Plain washer	
3095	9096 3690 07	1	Coupling - Motor	
3100	9096 4948 00	1	Motor support	
3110	0147 1413 00	2	Hex.bolt	
3115	0147 1480 00	2	Hex.bolt	
3120	0147 1480 00	1	Hex.bolt	
3125	0261 1090 51	2	Hex.nut	
3130	0266 2114 00	2	Hexagon nut	
3135	0301 2378 00	2	Plain washer	
3140	0301 2378 00	1	Plain washer	
3145	0301 2393 00	2	Plain washer	
3150	0301 2358 00	2	Plain washer	
3155	0333 2149 00	2	Spring washer	
			ZR200 7.5 bar(e) 240KW/ 3.3KV O	
			ZR200 8.6 bar(e) 240KW/ 3.3KV O	
			Drive arrg.complete with 240kw	
1005	1621 1428 00	1	Coupling housing	
1010	0147 1405 03	8	Hex.bolt	
1040	1621 1534 02	1	Coupling half	
1045	1619 6467 04	1	Set-rubbers	
1050	1621 1535 01	1	Coupling half	
1060	0147 1554 00	8	Hex.bolt	
1062	0147 1554 00	2	Hex.bolt	
1085	9096 4731 13	1	Reducing ring	
2000	9096 5000 00	1	Motor	
2106	1621 1673 00	2	Guard	

24

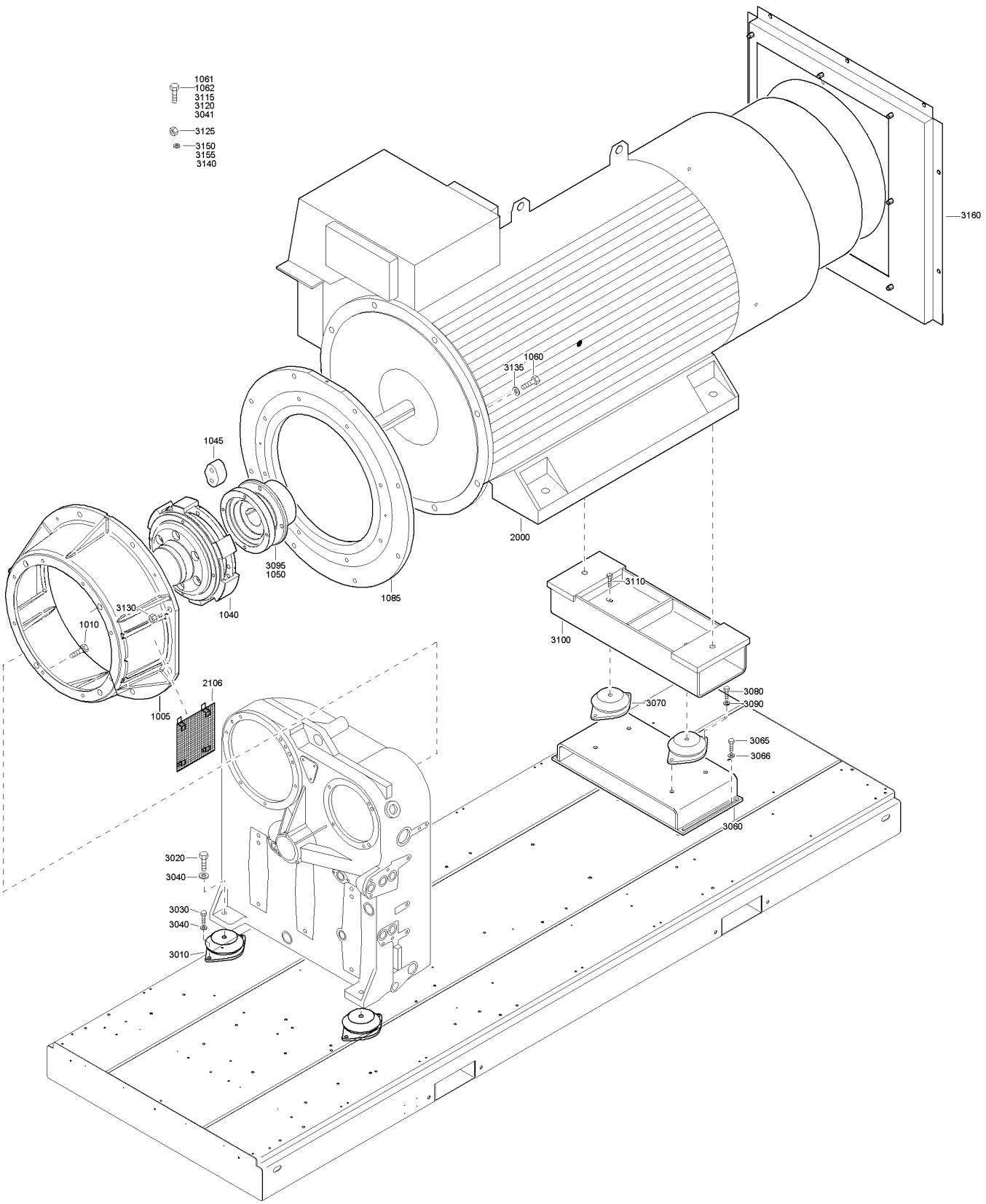
1061
1062
3115
3120
3041
3125
3150
3155
3140
3160
1060
3135
1045
2000
3095
1050
1085
3110
3130
1040
1010
3100
2106
1005
3080
3090
3070
3065
3066
3060
3020
3040
3030
3040
3010

Drive arrangement

Ref.	Part number	Qty	Name	Remarks
3010	9096 4671 00	2	Anti vibration mount	
3020	0147 1962 35	2	Hex.bolt	
3030	0147 1400 00	4	Hex.bolt	
3040	0301 2358 00	4	Plain washer	
3060	1621 3148 00	1	Support	
3065	0147 1401 00	4	Hex.bolt	
3066	0300 0274 92	4	Washer	
3070	9096 3915 00	2	Rubber buffer	
3080	0147 1400 00	4	Hex.bolt	
3090	0301 2358 00	4	Plain washer	
3095	9096 3690 07	1	Coupling - Motor.	
3100	9096 4948 00	1	Motor support	
3110	0147 1413 00	2	Hex.bolt	
3115	0147 1480 00	2	Hex.bolt	
3120	0147 1480 00	1	Hex.bolt	
3125	0261 1090 51	2	Hex.nut	
3130	0266 2114 00	2	Hexagon nut	
3135	0301 2378 00	2	Plain washer	
3140	0301 2378 00	1	Plain washer	
3145	0301 2393 00	2	Plain washer	
3150	0301 2358 00	2	Plain washer	
3155	0333 2149 00	2	Spring washer	
			ZR200 8.6 bar(e) 220KW/ 3.3KV O	
			ZR200 10 bar(e) 220KW/ 3.3KV O	
			Drive arrg.complete with 220kw	
1005	1621 1428 00	1	Coupling housing	
1010	0147 1405 03	8	Hex.bolt	
1040	1621 1534 02	1	Coupling half	
1045	1619 6467 04	1	Set-rubbers	
1050	1621 1535 01	1	Coupling half	
1060	0147 1554 00	8	Hex.bolt	
1062	0147 1554 00	2	Hex.bolt	
1085	9096 4731 13	1	Reducing ring	
2000	9096 4999 00	1	Motor	
2106	1621 1673 00	2	Guard	
3010	9096 4671 00	2	Anti vibration mount	
3020	0147 1962 35	2	Hex.bolt	
3030	0147 1400 00	4	Hex.bolt	
3040	0301 2358 00	4	Plain washer	
3060	1621 3148 00	1	Support	
3065	0147 1401 00	4	Hex.bolt	
3066	0300 0274 92	4	Washer	
3070	9096 3915 00	2	Rubber buffer	
3080	0147 1400 00	4	Hex.bolt	
3090	0301 2358 00	4	Plain washer	
3095	9096 3690 07	1	Coupling - Motor.	
3100	9096 4948 00	1	Motor support	
3110	0147 1413 00	2	Hex.bolt	
3115	0147 1480 00	2	Hex.bolt	
3120	0147 1480 00	1	Hex.bolt	
3125	0261 1090 51	2	Hex.nut	
3130	0266 2114 00	2	Hexagon nut	
3135	0301 2378 00	2	Plain washer	
3140	0301 2378 00	1	Plain washer	
3145	0301 2393 00	2	Plain washer	
3150	0301 2358 00	2	Plain washer	
3155	0333 2149 00	2	Spring washer	
			ZR200 10 bar(e) 200KW/ 3.3KV O	
			ZR160 7.5 bar(e) 200KW/ 3.3KV O	
			Drive arrg.complete with 200kw	
1005	1621 1428 00	1	Coupling housing	
1010	0147 1405 03	8	Hex.bolt	
1040	1621 1534 02	1	Coupling half	
1045	1619 6467 04	1	Set-rubbers	
1050	1621 1535 01	1	Coupling half	
1060	0147 1554 00	8	Hex.bolt	
1062	0147 1554 00	2	Hex.bolt	
1085	9096 4731 13	1	Reducing ring	
2000	9096 4998 00	1	Motor	
2106	1621 1673 00	2	Guard	
3010	9096 4671 00	2	Anti vibration mount	
3020	0147 1962 35	2	Hex.bolt	
3030	0147 1400 00	4	Hex.bolt	
3040	0301 2358 00	4	Plain washer	
3060	1621 3148 00	1	Support	
3065	0147 1401 00	4	Hex.bolt	
3066	0300 0274 92	4	Washer	
3070	9096 3915 00	2	Rubber buffer	
3080	0147 1400 00	4	Hex.bolt	
3090	0301 2358 00	4	Plain washer	
3095	9096 3690 07	1	Coupling - Motor.	
3100	9096 4948 00	1	Motor support	
3110	0147 1413 00	2	Hex.bolt	
3115	0147 1480 00	2	Hex.bolt	
3120	0147 1480 00	1	Hex.bolt	
3125	0261 1090 51	2	Hex.nut	
3130	0266 2114 00	2	Hexagon nut	
3135	0301 2378 00	2	Plain washer	
3140	0301 2378 00	1	Plain washer	
3145	0301 2393 00	2	Plain washer	
3150	0301 2358 00	2	Plain washer	
3155	0333 2149 00	2	Spring washer	
			ZR250 7.5 bar(e) 300KW/ 3.3KV O	
			ZR250 8.6 bar(e) 300KW/ 3.3KV O	
			Drive arrg.complete with 300kw	
1005	1621 3729 00	1	Coupling housing	
1010	0147 1405 03	8	Hex.bolt	
1040	1621 1534 02	1	Coupling half	
1045	1619 6467 04	1	Set-rubbers	
1050	1621 1535 01	1	Coupling half	
1060	0147 1554 00	8	Hex.bolt	
1061	0147 1632 03	2	Bolt	
2000	9096 5003 00	1	Motor	
2106	1621 1673 00	2	Guard	
3010	9096 3915 00	2	Rubber buffer	
3020	0147 1962 35	2	Hex.bolt	
3030	0147 1400 00	4	Hex.bolt	
3040	0301 2358 00	4	Plain washer	
3041	0147 1552 03	8	Bolt	
3060	1621 3148 00	1	Support	
3065	0147 1401 00	4	Hex.bolt	
3066	0300 0274 92	4	Washer	
3070	9096 3915 00	2	Rubber buffer	
3080	0147 1398 00	4	Hex.bolt	
3090	0301 2358 00	4	Plain washer	
3095	9096 3690 02	1	Coupling half	
3100	9096 4947 00	1	Motor support	
3110	0147 1413 00	2	Hex.bolt	
3115	0147 1962 35	2	Hex.bolt	

24

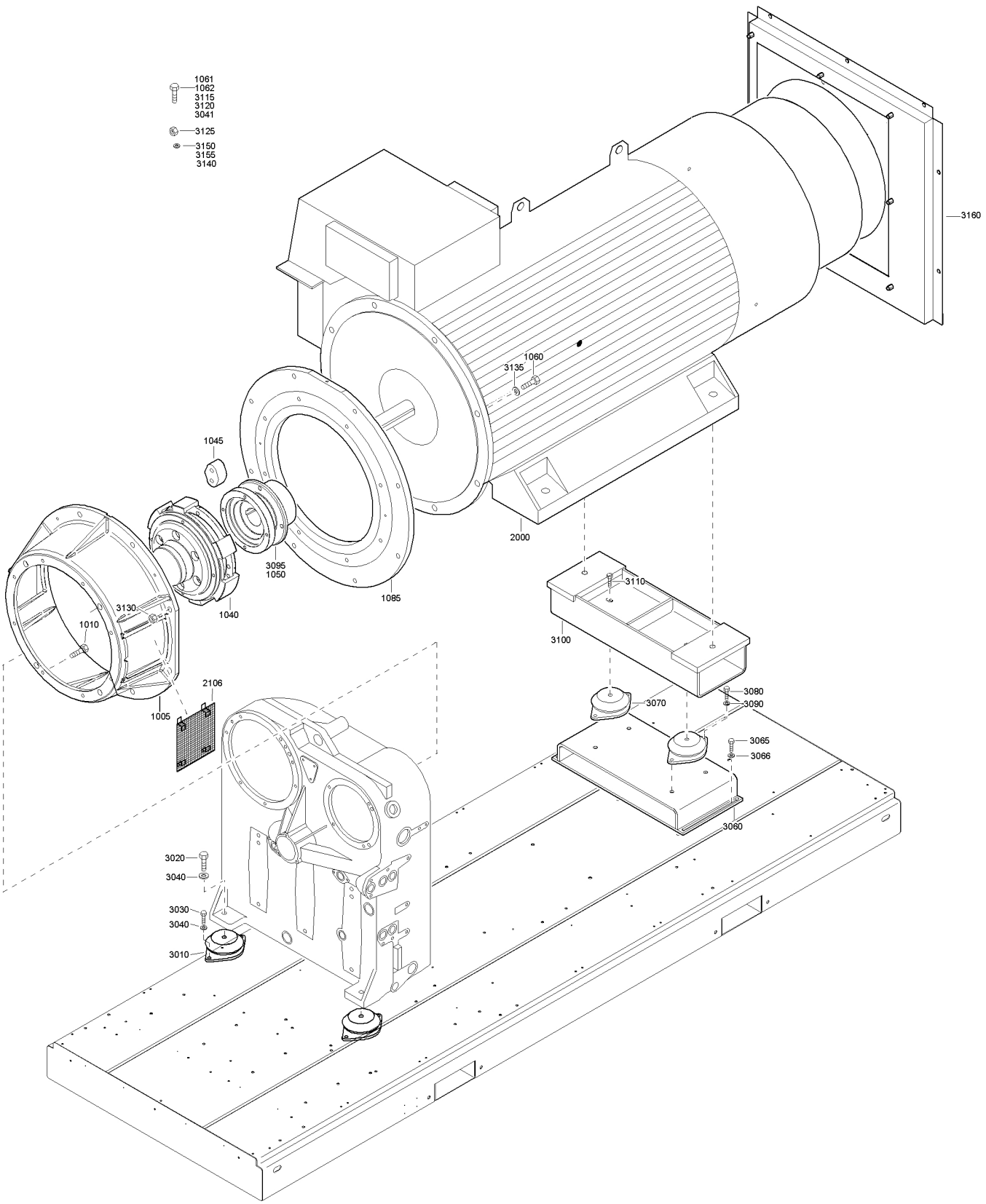
1061
1062
3115
3120
3041
3125
3150
3155
3140
3160
1060
3135
1045
2000
3095
1050
1085
1040
3130
1010
3110
3100
2106
1005
3080
3090
3070
3065
3066
3060
3020
3040
3030
3040
3010

Drive arrangement

24

Ref.	Part number	Qty	Name	Remarks
3120	0147 1480 00	1	Hex.bolt	
3125	1903 2058 13	2	Hex nut	
3130	0266 2114 00	2	Hexagon nut	
3135	0300 0274 53	2	Plain washer	
3140	0301 2378 00	1	Plain washer	
3145	0301 2408 00	2	Washer	
3150	0301 2358 00	2	Plain washer	
3155	0333 2153 00	2	Spring washer	
			ZR250 8.6 bar(e) 280KW/ 3.3KV O	
			ZR250 10 bar(e) 280KW/ 3.3KV O	
			Drive arrg.complete with 280kw	
1005	1621 3729 00	1	Coupling housing	
1010	0147 1405 03	8	Hex.bolt	
1040	1621 1534 02	1	Coupling half	
1045	1619 6467 04	1	Set-rubbers	
1050	1621 1535 01	1	Coupling half	
1060	0147 1554 00	8	Hex.bolt	
1061	0147 1632 03	2	Bolt	
2000	9096 5002 00	1	Motor	
2106	1621 1673 00	2	Guard	
3010	9096 3915 00	2	Rubber buffer	
3020	0147 1962 35	2	Hex.bolt	
3030	0147 1400 00	4	Hex.bolt	
3040	0301 2358 00	4	Plain washer	
3041	0147 1552 03	8	Bolt	
3060	1621 3148 00	1	Support	
3065	0147 1401 00	4	Hex.bolt	
3066	0300 0274 92	4	Washer	
3070	9096 3915 00	2	Rubber buffer	
3080	0147 1398 00	4	Hex.bolt	
3090	0301 2358 00	4	Plain washer	
3095	9096 3690 02	1	Coupling half	
3100	9096 4947 00	1	Motor support	
3110	0147 1413 00	2	Hex.bolt	
3115	0147 1962 35	2	Hex.bolt	
3120	0147 1480 00	1	Hex.bolt	
3125	1903 2058 13	2	Hex nut	
3130	0266 2114 00	2	Hexagon nut	
3135	0300 0274 53	2	Plain washer	
3140	0301 2378 00	1	Plain washer	
3145	0301 2408 00	2	Washer	
3150	0301 2358 00	2	Plain washer	
3155	0333 2153 00	2	Spring washer	
			ZR250 10 bar(e) 255KW/ 3.3KV O	
			ZR200 7.5 bar(e) 255KW/ 3.3KV O	
			Drive arrg.complete with 255kw	
1005	1621 1428 00	1	Coupling housing	
1010	0147 1405 03	8	Hex.bolt	
1040	1621 1534 02	1	Coupling half	
1050	1621 1535 01	1	Coupling half	
1060	0147 1554 00	8	Hex.bolt	
1062	0147 1554 00	2	Hex.bolt	
1085	9096 4731 13	1	Reducing ring	
2000	9096 5001 00	1	Motor	
2106	1621 1673 00	2	Guard	
3010	1619 6467 04	1	Set-rubbers	
3020	9096 4671 00	2	Anti vibration mount	
3030	0147 1962 35	2	Hex.bolt	
3040	0147 1400 00	4	Hex.bolt	
3041	0301 2358 00	4	Plain washer	
3060	1621 3148 00	1	Support	
3065	0147 1401 00	4	Hex.bolt	
3066	0300 0274 92	4	Washer	
3070	9096 3915 00	2	Rubber buffer	
3080	0147 1400 00	4	Hex.bolt	
3090	0301 2358 00	4	Plain washer	
3095	9096 3690 07	1	Coupling - Motor.	
3100	9096 4948 00	1	Motor support	
3110	0147 1413 00	2	Hex.bolt	
3115	0147 1480 00	2	Hex.bolt	
3120	0147 1480 00	1	Hex.bolt	
3125	0261 1090 51	2	Hex.nut	
3130	0301 2378 00	2	Plain washer	
3135	0266 2114 00	2	Hexagon nut	
3140	0301 2378 00	1	Plain washer	
3145	0333 2149 00	2	Spring washer	
3150	0301 2358 00	2	Plain washer	
3155	0301 2393 00	2	Plain washer	
			ZR275 7.5 bar(e) 320KW/ 3.3KV O	
			Drive arrg.complete with 320kw	
1005	1621 3729 00	1	Coupling housing	
1010	0147 1405 03	8	Hex.bolt	
1040	1621 1534 02	1	Coupling half	
1045	1619 6467 04	1	Set-rubbers	
1050	1621 1535 01	1	Coupling half	
1060	0147 1554 00	8	Hex.bolt	
1061	0147 1632 03	2	Bolt	
2000	9096 5004 00	1	Motor	
2106	1621 1673 00	2	Guard	
3010	9096 3915 00	2	Rubber buffer	
3020	0147 1962 35	2	Hex.bolt	
3030	0147 1400 00	4	Hex.bolt	
3040	0301 2358 00	4	Plain washer	
3041	0147 1552 03	8	Bolt	
3060	1621 3148 00	1	Support	
3065	0147 1401 00	4	Hex.bolt	
3066	0300 0274 92	4	Washer	
3070	9096 3915 00	2	Rubber buffer	
3080	0147 1398 00	4	Hex.bolt	
3090	0301 2358 00	4	Plain washer	
3095	9096 3690 07	1	Coupling - Motor.	
3100	9096 4947 00	1	Motor support	
3110	0147 1413 00	2	Hex.bolt	
3115	0147 1962 35	2	Hex.bolt	
3120	0147 1480 00	1	Hex.bolt	
3125	1903 2058 13	2	Hex nut	
3130	0266 2114 00	2	Hexagon nut	
3135	0300 0274 53	2	Plain washer	
3140	0301 2378 00	1	Plain washer	
3145	0301 2408 00	2	Washer	
3150	0301 2358 00	2	Plain washer	
3155	0333 2153 00	2	Spring washer	
3160	9096 4955 00	1	Motor baffle	
			ZR275 7.5 bar(e) 345KW/ 3.3KV O	
			Drive arrg.complete with 345kw	
1005	1621 3729 00	1	Coupling housing	
1010	0147 1405 03	8	Hex.bolt	
1040	1621 1534 02	1	Coupling half	

24

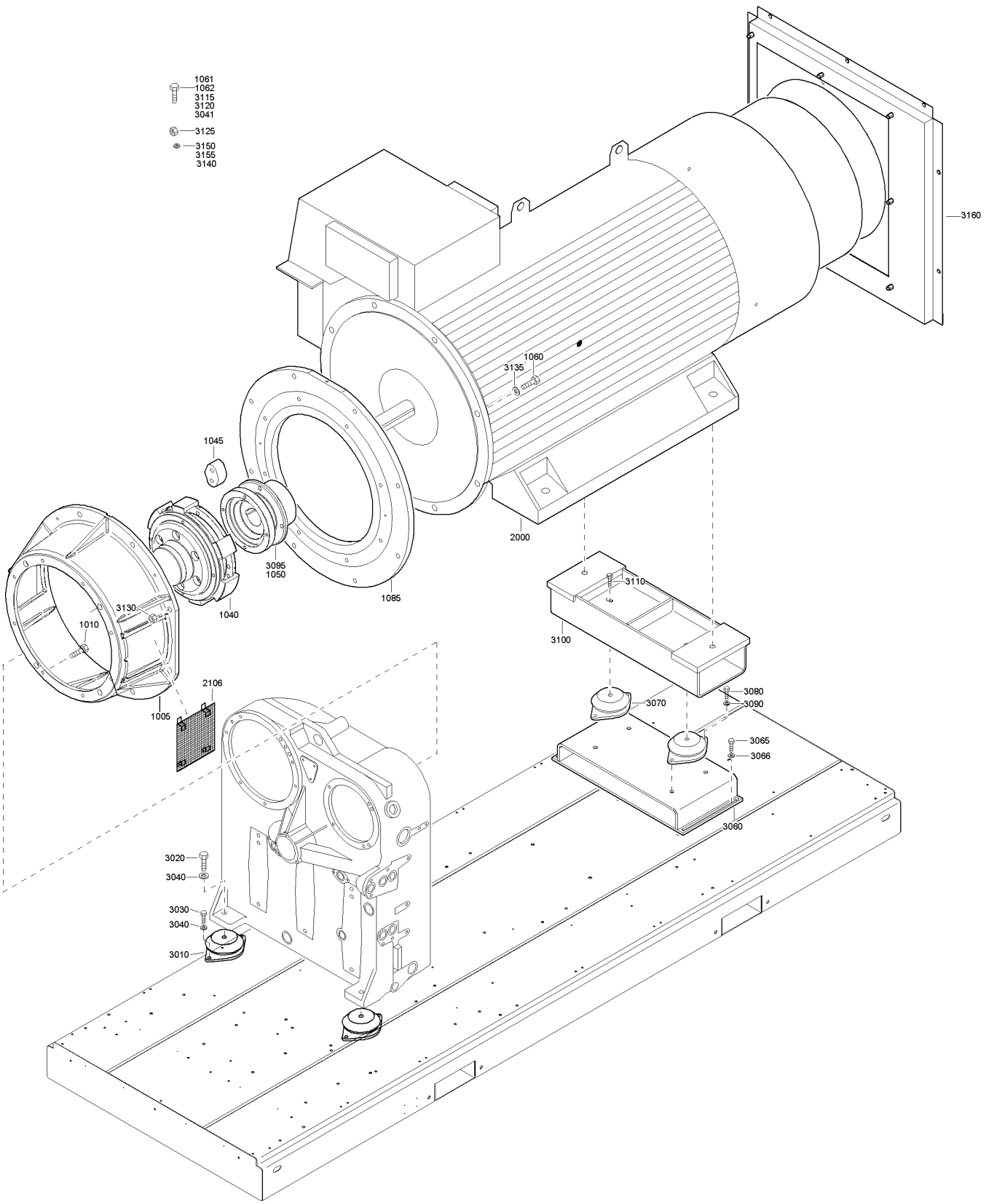
1061
1062
3115
3120
3041
3125
3150
3155
3140
3160
1060
3135
1045
2000
3095
1050
1085
3110
3130
1040
1010
3100
2106
1005
3080
3090
3070
3065
3066
3060
3020
3040
3030
3040
3010

Drive arrangement

24

Ref.	Part number	Qty	Name	Remarks
1045	1619 6467 04	1	Set-rubbers	
1050	1621 1535 01	1	Coupling half	
1060	0147 1554 00	8	Hex.bolt	
1061	0147 1632 03	2	Bolt	
1085	9096 4731 14	1	Reducer ring	
2000	9096 5005 00	1	Motor	
2106	1621 1673 00	2	Guard	
3010	9096 3915 00	2	Rubber buffer	
3020	0147 1962 35	2	Hex.bolt	
3030	0147 1400 00	4	Hex.bolt	
3040	0301 2358 00	4	Plain washer	
3041	0147 1552 03	8	Bolt	
3060	1621 3148 00	1	Support	
3065	0147 1401 00	4	Hex.bolt	
3066	0300 0274 92	4	Washer	
3070	9096 3915 00	2	Rubber buffer	
3080	0147 1398 00	4	Hex.bolt	
3090	0301 2358 00	4	Plain washer	
3095	9096 3690 10	1	Coupling	
3100	9096 4947 00	1	Motor support	
3110	0147 1413 00	2	Hex.bolt	
3115	0147 1962 35	2	Hex.bolt	
3120	0147 1480 00	1	Hex.bolt	
3125	1903 2058 13	2	Hex nut	
3130	0266 2114 00	2	Hexagon nut	
3135	0300 0274 53	2	Plain washer	
3140	0301 2378 00	1	Plain washer	
3145	0301 2408 00	2	Washer	
3150	0301 2358 00	2	Plain washer	
3155	0333 2153 00	2	Spring washer	
3160	9096 4955 60	1	Motor baffle	
			ZR160 7.5 bar(e) 190KW/ 6.6KV O	
			ZR160 8.6 bar(e) 190KW/ 6.6KV O	
			Drive arrg.complete with 190kw	
1005	1621 3729 00	1	Coupling housing	
1010	0147 1405 03	8	Hex.bolt	
1040	1621 1534 02	1	Coupling half	
1045	1619 6467 04	1	Set-rubbers	
1050	1621 1535 01	1	Coupling half	
1060	0147 1554 00	8	Hex.bolt	
1061	0147 1632 03	2	Bolt	
2000	9096 5008 00	1	Motor	
2106	1621 1673 00	2	Guard	
3010	9096 3915 00	2	Rubber buffer	
3020	0147 1962 35	2	Hex.bolt	
3030	0147 1400 00	4	Hex.bolt	
3040	0301 2358 00	4	Plain washer	
3041	0147 1552 03	8	Bolt	
3060	1621 3148 00	1	Support	
3065	0147 1401 00	4	Hex.bolt	
3066	0300 0274 92	4	Washer	
3070	9096 3915 00	2	Rubber buffer	
3080	0147 1398 00	4	Hex.bolt	
3090	0301 2358 00	4	Plain washer	
3095	9096 3690 03	1	Coupling half	
3100	9096 4946 00	1	Motor support	
3110	0147 1413 00	2	Hex.bolt	
3115	0147 1962 35	2	Hex.bolt	
3120	0147 1480 00	1	Hex.bolt	
3125	1903 2058 13	2	Hex nut	
3130	0266 2114 00	2	Hexagon nut	
3135	0300 0274 53	2	Plain washer	
3140	0301 2378 00	1	Plain washer	
3145	0301 2408 00	2	Washer	
3150	0301 2358 00	2	Plain washer	
3155	0333 2153 00	2	Spring washer	
			ZR160 10 bar(e) 175KW/ 6.6KV O	
			ZR160 8.6 bar(e) 175KW/ 6.6KV O	
			Drive arrg.complete with 175kw	
1005	1621 3729 00	1	Coupling housing	
1010	0147 1405 03	8	Hex.bolt	
1040	1621 1534 02	1	Coupling half	
1045	1619 6467 04	1	Set-rubbers	
1050	1621 1535 01	1	Coupling half	
1060	0147 1554 00	8	Hex.bolt	
1061	0147 1632 03	2	Bolt	
2000	9096 5007 00	1	Motor	
2106	1621 1673 00	2	Guard	
3010	9096 3915 00	2	Rubber buffer	
3020	0147 1962 35	2	Hex.bolt	
3030	0147 1400 00	4	Hex.bolt	
3040	0301 2358 00	4	Plain washer	
3041	0147 1552 03	8	Bolt	
3060	1621 3148 00	1	Support	
3065	0147 1401 00	4	Hex.bolt	
3066	0300 0274 92	4	Washer	
3070	9096 3915 00	2	Rubber buffer	
3080	0147 1398 00	4	Hex.bolt	
3090	0301 2358 00	4	Plain washer	
3095	9096 3690 03	1	Coupling half	
3100	9096 4946 00	1	Motor support	
3110	0147 1413 00	2	Hex.bolt	
3115	0147 1962 35	2	Hex.bolt	
3120	0147 1480 00	1	Hex.bolt	
3125	1903 2058 13	2	Hex nut	
3130	0266 2114 00	2	Hexagon nut	
3135	0300 0274 53	2	Plain washer	
3140	0301 2378 00	1	Plain washer	
3145	0301 2408 00	2	Washer	
3150	0301 2358 00	2	Plain washer	
3155	0333 2153 00	2	Spring washer	
			ZR160 10 bar(e) 165KW/ 6.6KV O	
			Drive arrg.complete with 165kw	
1005	1621 3729 00	1	Coupling housing	
1010	0147 1405 03	8	Hex.bolt	
1040	1621 1534 02	1	Coupling half	
1045	1619 6467 04	1	Set-rubbers	
1050	1621 1535 01	1	Coupling half	
1060	0147 1554 00	8	Hex.bolt	
1061	0147 1632 03	2	Bolt	
2000	9096 5006 00	1	Motor	
2106	1621 1673 00	2	Guard	
3010	9096 3915 00	2	Rubber buffer	
3020	0147 1962 35	2	Hex.bolt	
3030	0147 1400 00	4	Hex.bolt	
3040	0301 2358 00	4	Plain washer	
3041	0147 1552 03	8	Bolt	
3060	1621 3148 00	1	Support	
3065	0147 1401 00	4	Hex.bolt	
3066	0300 0274 92	4	Washer	

24

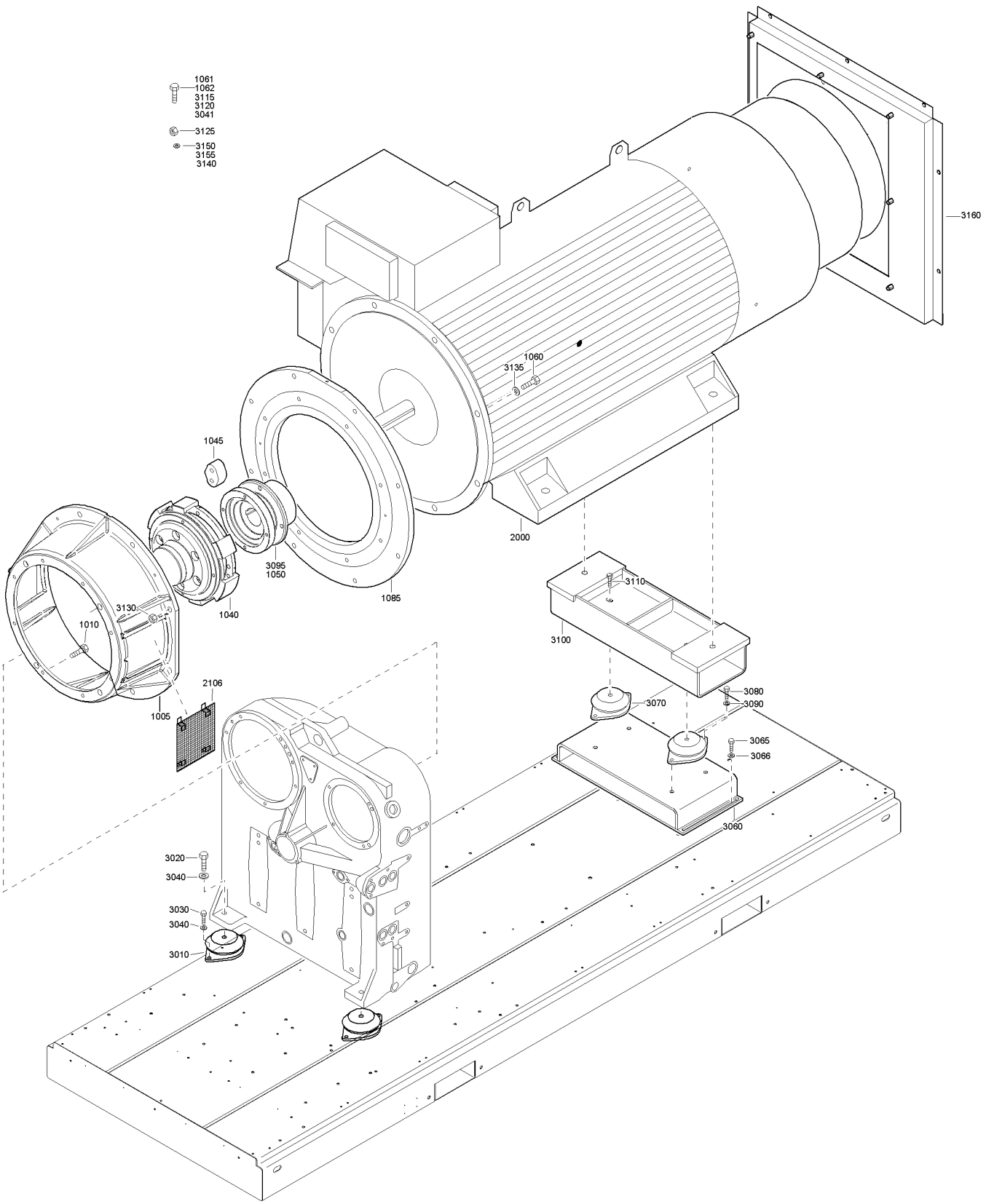
1061
1062
3115
3120
3041
3125
3150
3155
3140
3160
1060
3135
1045
2000
3095
1050
1085
3110
3130
1040
1010
3100
2106
1005
3080
3090
3070
3065
3066
3060
3020
3040
3030
3040
3010

Drive arrangement

24

Ref.	Part number	Qty	Name	Remarks
3070	9096 3915 00	2	Rubber buffer	
3080	0147 1398 00	4	Hex.bolt	
3090	0301 2358 00	4	Plain washer	
3095	9096 3690 03	1	Coupling half	
3100	9096 4946 00	1	Motor support	
3110	0147 1413 00	2	Hex.bolt	
3115	0147 1962 35	2	Hex.bolt	
3120	0147 1480 00	1	Hex.bolt	
3125	1903 2058 13	2	Hex nut	
3130	0266 2114 00	2	Hexagon nut	
3135	0300 0274 53	2	Plain washer	
3140	0301 2378 00	1	Plain washer	
3145	0301 2408 00	2	Washer	
3150	0301 2358 00	2	Plain washer	
3155	0333 2153 00	2	Spring washer	
			ZR200 7.5 bar(e) 240KW/ 6.6KV O	
			ZR200 8.6 bar(e) 240KW/ 6.6KV O	
			Drive arrg.complete with 240kw	
1005	1621 3729 00	1	Coupling housing	
1010	0147 1405 03	8	Hex.bolt	
1040	1621 1534 02	1	Coupling half	
1045	1619 6467 04	1	Set-rubbers	
1050	1621 1535 01	1	Coupling half	
1060	0147 1554 00	8	Hex.bolt	
1061	0147 1632 03	2	Bolt	
2000	9096 5011 00	1	Motor	
2106	1621 1673 00	2	Guard	
3010	9096 3915 00	2	Rubber buffer	
3020	0147 1962 35	2	Hex.bolt	
3030	0147 1400 00	4	Hex.bolt	
3040	0301 2358 00	4	Plain washer	
3041	0147 1552 03	8	Bolt	
3060	1621 3148 00	1	Support	
3065	0147 1401 00	4	Hex.bolt	
3066	0300 0274 92	4	Washer	
3070	9096 3915 00	2	Rubber buffer	
3080	0147 1398 00	4	Hex.bolt	
3090	0301 2358 00	4	Plain washer	
3095	9096 3690 03	1	Coupling half	
3100	9096 4946 00	1	Motor support	
3110	0147 1413 00	2	Hex.bolt	
3115	0147 1962 35	2	Hex.bolt	
3120	0147 1480 00	1	Hex.bolt	
3125	1903 2058 13	2	Hex nut	
3130	0266 2114 00	2	Hexagon nut	
3135	0300 0274 53	2	Plain washer	
3140	0301 2378 00	1	Plain washer	
3145	0301 2408 00	2	Washer	
3150	0301 2358 00	2	Plain washer	
3155	0333 2153 00	2	Spring washer	
			ZR200 8.6 bar(e) 220KW/ 6.6KV O	
			ZR200 10 bar(e) 220KW/ 6.6KV O	
			Drive arrg.complete with 220kw	
1005	1621 3729 00	1	Coupling housing	
1010	0147 1405 03	8	Hex.bolt	
1040	1621 1534 02	1	Coupling half	
1045	1619 6467 04	1	Set-rubbers	
1050	1621 1535 01	1	Coupling half	
1060	0147 1554 00	8	Hex.bolt	
1061	0147 1632 03	2	Bolt	
2000	9096 5010 00	1	Motor	
2106	1621 1673 00	2	Guard	
3010	9096 3915 00	2	Rubber buffer	
3020	0147 1962 35	2	Hex.bolt	
3030	0147 1400 00	4	Hex.bolt	
3040	0301 2358 00	4	Plain washer	
3041	0147 1552 03	8	Bolt	
3060	1621 3148 00	1	Support	
3065	0147 1401 00	4	Hex.bolt	
3066	0300 0274 92	4	Washer	
3070	9096 3915 00	2	Rubber buffer	
3080	0147 1398 00	4	Hex.bolt	
3090	0301 2358 00	4	Plain washer	
3095	9096 3690 03	1	Coupling half	
3100	9096 4946 00	1	Motor support	
3110	0147 1413 00	2	Hex.bolt	
3115	0147 1962 35	2	Hex.bolt	
3120	0147 1480 00	1	Hex.bolt	
3125	1903 2058 13	2	Hex nut	
3130	0266 2114 00	2	Hexagon nut	
3135	0300 0274 53	2	Plain washer	
3140	0301 2378 00	1	Plain washer	
3145	0301 2408 00	2	Washer	
3150	0301 2358 00	2	Plain washer	
3155	0333 2153 00	2	Spring washer	
			ZR200 10 bar(e) 200KW/ 6.6KV O	
			ZR160 7.5 bar(e) 200KW/ 6.6KV O	
			Drive arrg.complete with 200kw	
1005	1621 3729 00	1	Coupling housing	
1010	0147 1405 03	8	Hex.bolt	
1040	1621 1534 02	1	Coupling half	
1045	1619 6467 04	1	Set-rubbers	
1050	1621 1535 01	1	Coupling half	
1060	0147 1554 00	8	Hex.bolt	
1061	0147 1632 03	2	Bolt	
2000	9096 5009 00	1	Motor	
2106	1621 1673 00	2	Guard	
3010	9096 3915 00	2	Rubber buffer	
3020	0147 1962 35	2	Hex.bolt	
3030	0147 1400 00	4	Hex.bolt	
3040	0301 2358 00	4	Plain washer	
3041	0147 1552 03	8	Bolt	
3060	1621 3148 00	1	Support	
3065	0147 1401 00	4	Hex.bolt	
3066	0300 0274 92	4	Washer	
3070	9096 3915 00	2	Rubber buffer	
3080	0147 1398 00	4	Hex.bolt	
3090	0301 2358 00	4	Plain washer	
3095	9096 3690 03	1	Coupling half	
3100	9096 4946 00	1	Motor support	
3110	0147 1413 00	2	Hex.bolt	
3115	0147 1962 35	2	Hex.bolt	
3120	0147 1480 00	1	Hex.bolt	
3125	1903 2058 13	2	Hex nut	
3130	0266 2114 00	2	Hexagon nut	
3135	0300 0274 53	2	Plain washer	
3140	0301 2378 00	1	Plain washer	
3145	0301 2408 00	2	Washer	
3150	0301 2358 00	2	Plain washer	

24

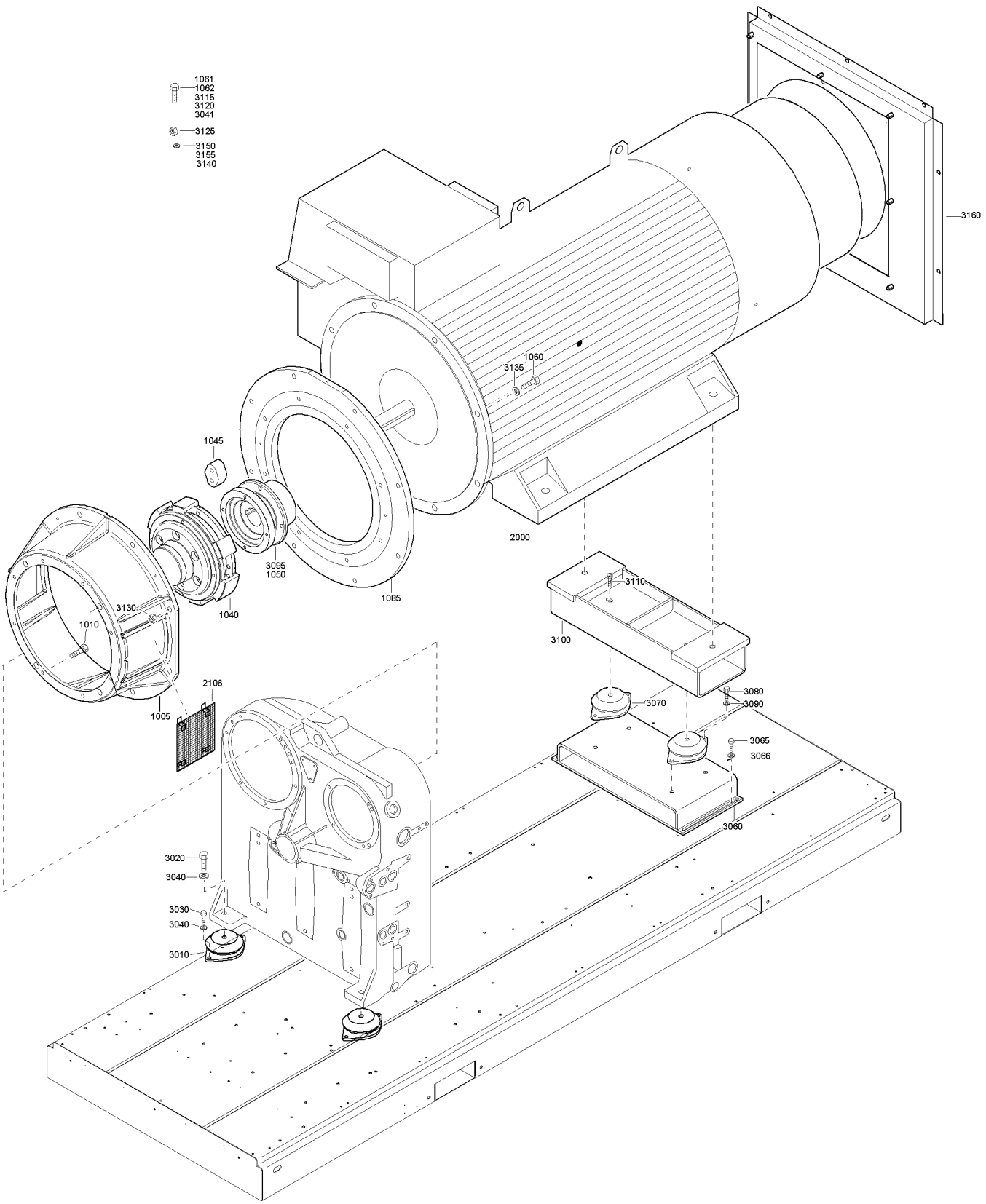
1061
1062
3115
3120
3041
3125
3150
3155
3140
3160
1060
3135
1045
2000
3095
1050
1085
3110
3130
1040
1010
3100
2106
1005
3080
3090
3070
3065
3066
3060
3020
3040
3030
3040
3010

Drive arrangement

Ref.	Part number	Qty	Name	Remarks
3155	0333 2153 00	2	Spring washer	
			ZR250 7.5 bar(e) 300KW/ 6.6KV O	
			ZR250 8.6 bar(e) 300KW/ 6.6KV O	
			Drive arrg.complete with 300kw	
1005	1621 3729 00	1	Coupling housing	
1010	0147 1405 03	8	Hex.bolt	
1040	1621 1534 02	1	Coupling half	
1045	1619 6467 04	1	Set-rubbers	
1050	1621 1535 01	1	Coupling half	
1060	0147 1554 00	8	Hex.bolt	
1061	0147 1632 03	2	Bolt	
2000	9096 5014 00	1	Motor	
2106	1621 1673 00	2	Guard	
3010	9096 3915 00	2	Rubber buffer	
3020	0147 1962 35	2	Hex.bolt	
3030	0147 1400 00	4	Hex.bolt	
3040	0301 2358 00	4	Plain washer	
3041	0147 1552 03	8	Bolt	
3060	1621 3148 00	1	Support	
3065	0147 1401 00	4	Hex.bolt	
3066	0300 0274 92	4	Washer	
3070	9096 3915 00	2	Rubber buffer	
3080	0147 1398 00	4	Hex.bolt	
3090	0301 2358 00	4	Plain washer	
3095	9096 3690 02	1	Coupling half	
3100	9096 4947 00	1	Motor support	
3110	0147 1413 00	2	Hex.bolt	
3115	0147 1962 35	2	Hex.bolt	
3120	0147 1480 00	1	Hex.bolt	
3125	1903 2058 13	2	Hex nut	
3130	0266 2114 00	2	Hexagon nut	
3135	0300 0274 53	2	Plain washer	
3140	0301 2378 00	1	Plain washer	
3145	0301 2408 00	2	Washer	
3150	0301 2358 00	2	Plain washer	
3155	0333 2153 00	2	Spring washer	
			ZR250 8.6 bar(e) 280KW/ 6.6KV O	
			ZR250 10 bar(e) 280KW/ 6.6KV O	
			Drive arrg.complete with 280kw	
1005	1621 3729 00	1	Coupling housing	
1010	0147 1405 03	8	Hex.bolt	
1040	1621 1534 02	1	Coupling half	
1045	1619 6467 04	1	Set-rubbers	
1050	1621 1535 01	1	Coupling half	
1060	0147 1554 00	8	Hex.bolt	
1061	0147 1632 03	2	Bolt	
2000	9096 5013 00	1	Motor	
2106	1621 1673 00	2	Guard	
3010	9096 3915 00	2	Rubber buffer	
3020	0147 1962 35	2	Hex.bolt	
3030	0147 1400 00	4	Hex.bolt	
3040	0301 2358 00	4	Plain washer	
3041	0147 1552 03	8	Bolt	
3060	1621 3148 00	1	Support	
3065	0147 1401 00	4	Hex.bolt	
3066	0300 0274 92	4	Washer	
3070	9096 3915 00	2	Rubber buffer	
3080	0147 1398 00	4	Hex.bolt	
3090	0301 2358 00	4	Plain washer	
3095	9096 3690 02	1	Coupling half	
3100	9096 4947 00	1	Motor support	
3110	0147 1413 00	2	Hex.bolt	
3115	0147 1962 35	2	Hex.bolt	
3120	0147 1480 00	1	Hex.bolt	
3125	1903 2058 13	2	Hex nut	
3130	0266 2114 00	2	Hexagon nut	
3135	0300 0274 53	2	Plain washer	
3140	0301 2378 00	1	Plain washer	
3145	0301 2408 00	2	Washer	
3150	0301 2358 00	2	Plain washer	
3155	0333 2153 00	2	Spring washer	
			ZR250 10 bar(e) 255KW/ 6.6KV O	
			ZR200 7.5 bar(e) 255KW/ 6.6KV O	
			Drive arrg.complete with 255kw	
1005	1621 3729 00	1	Coupling housing	
1010	0147 1405 03	8	Hex.bolt	
1040	1621 1534 02	1	Coupling half	
1045	1619 6467 04	1	Set-rubbers	
1050	1621 1535 01	1	Coupling half	
1060	0147 1554 00	8	Hex.bolt	
1061	0147 1632 03	2	Bolt	
2000	9096 5012 00	1	Motor	
2106	1621 1673 00	2	Guard	
3010	9096 3915 00	2	Rubber buffer	
3020	0147 1962 35	2	Hex.bolt	
3030	0147 1400 00	4	Hex.bolt	
3040	0301 2358 00	4	Plain washer	
3041	0147 1552 03	8	Bolt	
3060	1621 3148 00	1	Support	
3065	0147 1401 00	4	Hex.bolt	
3066	0300 0274 92	4	Washer	
3070	9096 3915 00	2	Rubber buffer	
3080	0147 1398 00	4	Hex.bolt	
3090	0301 2358 00	4	Plain washer	
3095	9096 3690 02	1	Coupling half	
3100	9096 4947 00	1	Motor support	
3110	0147 1413 00	2	Hex.bolt	
3115	0147 1962 35	2	Hex.bolt	
3120	0147 1480 00	1	Hex.bolt	
3125	1903 2058 13	2	Hex nut	
3130	0266 2114 00	2	Hexagon nut	
3135	0300 0274 53	2	Plain washer	
3140	0301 2378 00	1	Plain washer	
3145	0301 2408 00	2	Washer	
3150	0301 2358 00	2	Plain washer	
3155	0333 2153 00	2	Spring washer	
			ZR275 7.5 bar(e) 320KW/ 6.6KV O	
			Drive arrg.complete with 320kw	
1005	1621 3729 00	1	Coupling housing	
1010	0147 1405 03	8	Hex.bolt	
1040	1621 1534 02	1	Coupling half	
1045	1619 6467 04	1	Set-rubbers	
1050	1621 1535 01	1	Coupling half	
1060	0147 1554 00	8	Hex.bolt	
1061	0147 1632 03	2	Bolt	
2000	9096 5015 00	1	Motor	
2106	1621 1673 00	2	Guard	

24

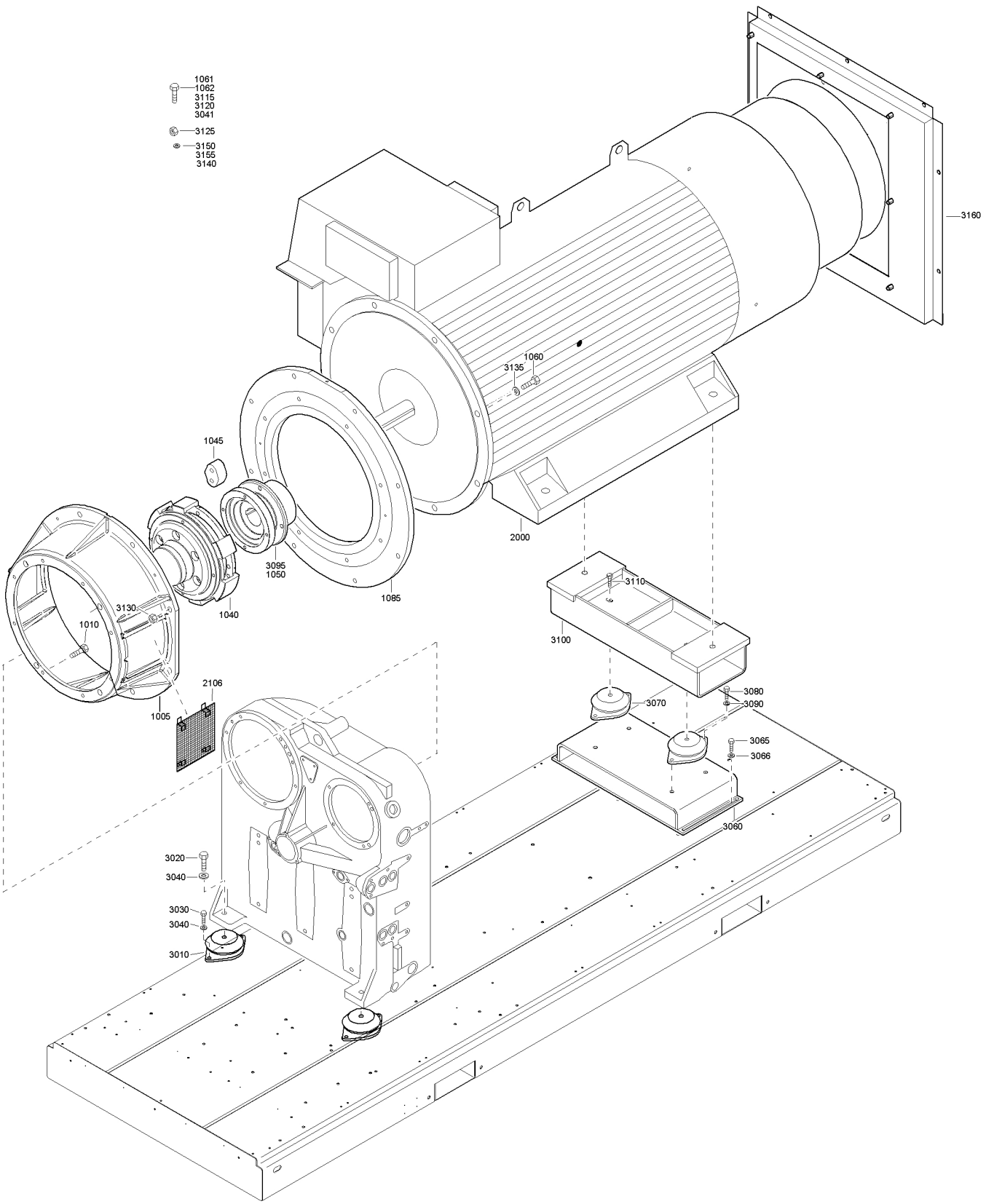
1061
1062
3115
3120
3041
3125
3150
3155
3140
3160
1060
3135
1045
2000
3095
1050
1085
3110
3130
1040
1010
3100
2106
1005
3080
3090
3070
3065
3066
3060
3020
3040
3030
3040
3010

Drive arrangement

Ref.	Part number	Qty	Name	Remarks
3010	9096 3915 00	2	Rubber buffer	
3020	0147 1962 35	2	Hex.bolt	
3030	0147 1400 00	4	Hex.bolt	
3040	0301 2358 00	4	Plain washer	
3041	0147 1552 03	8	Bolt	
3060	1621 3148 00	1	Support	
3065	0147 1401 00	4	Hex.bolt	
3066	0300 0274 92	4	Washer	
3070	9096 3915 00	2	Rubber buffer	
3080	0147 1398 00	4	Hex.bolt	
3090	0301 2358 00	4	Plain washer	
3095	9096 3690 07	1	Coupling - Motor.	
3100	9096 4947 00	1	Motor support	
3110	0147 1413 00	2	Hex.bolt	
3115	0147 1962 35	2	Hex.bolt	
3120	0147 1480 00	1	Hex.bolt	
3125	1903 2058 13	2	Hex nut	
3130	0266 2114 00	2	Hexagon nut	
3135	0300 0274 53	2	Plain washer	
3140	0301 2378 00	1	Plain washer	
3145	0301 2408 00	2	Washer	
3150	0301 2358 00	2	Plain washer	
3155	0333 2153 00	2	Spring washer	
			ZR275 7.5 bar(e) 345KW/ 6.6KV O	
			Drive arrg.complete with 345kw	
1005	1621 3729 00	1	Coupling housing	
1010	0147 1405 03	8	Hex.bolt	
1040	1621 1534 02	1	Coupling half	
1045	1619 6467 04	1	Set-rubbers	
1050	1621 1535 01	1	Coupling half	
1060	0147 1554 00	8	Hex.bolt	
1061	0147 1632 03	2	Bolt	
1085	9096 4731 14	1	Reducer ring	
2000	9096 5016 00	1	Motor	
2106	1621 1673 00	2	Guard	
3010	9096 3915 00	2	Rubber buffer	
3020	0147 1962 35	2	Hex.bolt	
3030	0147 1400 00	4	Hex.bolt	
3040	0301 2358 00	4	Plain washer	
3041	0147 1552 03	8	Bolt	
3060	1621 3148 00	1	Support	
3065	0147 1401 00	4	Hex.bolt	
3066	0300 0274 92	4	Washer	
3070	9096 3915 00	2	Rubber buffer	
3080	0147 1398 00	4	Hex.bolt	
3090	0301 2358 00	4	Plain washer	
3095	9096 3690 07	1	Coupling - Motor.	
3100	9096 4947 00	1	Motor support	
3110	0147 1413 00	2	Hex.bolt	
3115	0147 1962 35	2	Hex.bolt	
3120	0147 1480 00	1	Hex.bolt	
3125	1903 2058 13	2	Hex nut	
3130	0266 2114 00	2	Hexagon nut	
3135	0300 0274 53	2	Plain washer	
3140	0301 2378 00	1	Plain washer	
3145	0301 2408 00	2	Washer	
3150	0301 2358 00	2	Plain washer	
3155	0333 2153 00	2	Spring washer	
3160	9096 4955 00	1	Motor baffle	
			ZR250 7.5 bar(e) 320KW/ 3.3KV O	

Ref.	Part number	Qty	Name	Remarks
			Drive arrg.complete with 320kw	
1005	1621 3729 00	1	Coupling housing	
1010	0147 1405 03	8	Hex.bolt	
1040	1621 1534 02	1	Coupling half	
1045	1619 6467 04	1	Set-rubbers	
1050	1621 1535 01	1	Coupling half	
1060	0147 1554 00	8	Hex.bolt	
1061	0147 1632 03	2	Bolt	
2000	9096 5020 00	1	Motor	
2106	1621 1673 00	2	Guard	
3010	9096 3915 00	2	Rubber buffer	
3020	0147 1962 35	2	Hex.bolt	
3030	0147 1400 00	4	Hex.bolt	
3040	0301 2358 00	4	Plain washer	
3041	0147 1552 03	8	Bolt	
3060	1621 3148 00	1	Support	
3065	0147 1401 00	4	Hex.bolt	
3066	0300 0274 92	4	Washer	
3070	9096 3915 00	2	Rubber buffer	
3080	0147 1398 00	4	Hex.bolt	
3090	0301 2358 00	4	Plain washer	
3095	9096 3690 02	1	Coupling half	
3100	9096 4947 00	1	Motor support	
3110	0147 1413 00	2	Hex.bolt	
3115	0147 1962 35	2	Hex.bolt	
3120	0147 1480 00	1	Hex.bolt	
3125	1903 2058 13	2	Hex nut	
3130	0266 2114 00	2	Hexagon nut	
3135	0300 0274 53	2	Plain washer	
3140	0301 2378 00	1	Plain washer	
3145	0301 2408 00	2	Washer	
3150	0301 2358 00	2	Plain washer	
3155	0333 2153 00	2	Spring washer	
			ZR250 7.5 bar(e) 320KW/ 6.6KV O	
			Drive arrg.complete with 320kw	
1005	1621 3729 00	1	Coupling housing	
1010	0147 1405 03	8	Hex.bolt	
1040	1621 1534 02	1	Coupling half	
1045	1619 6467 04	1	Set-rubbers	
1050	1621 1535 01	1	Coupling half	
1060	0147 1554 00	8	Hex.bolt	
1061	0147 1632 03	2	Bolt	
2000	9096 5021 00	1	Motor	
2106	1621 1673 00	2	Guard	
3010	9096 3915 00	2	Rubber buffer	
3020	0147 1962 35	2	Hex.bolt	
3030	0147 1400 00	4	Hex.bolt	
3040	0301 2358 00	4	Plain washer	
3041	0147 1552 03	8	Bolt	
3060	1621 3148 00	1	Support	
3065	0147 1401 00	4	Hex.bolt	
3066	0300 0274 92	4	Washer	
3070	9096 3915 00	2	Rubber buffer	
3080	0147 1398 00	4	Hex.bolt	
3090	0301 2358 00	4	Plain washer	
3095	9096 3690 02	1	Coupling half	
3100	9096 4947 00	1	Motor support	
3110	0147 1413 00	2	Hex.bolt	
3115	0147 1962 35	2	Hex.bolt	
3120	0147 1480 00	1	Hex.bolt	

24

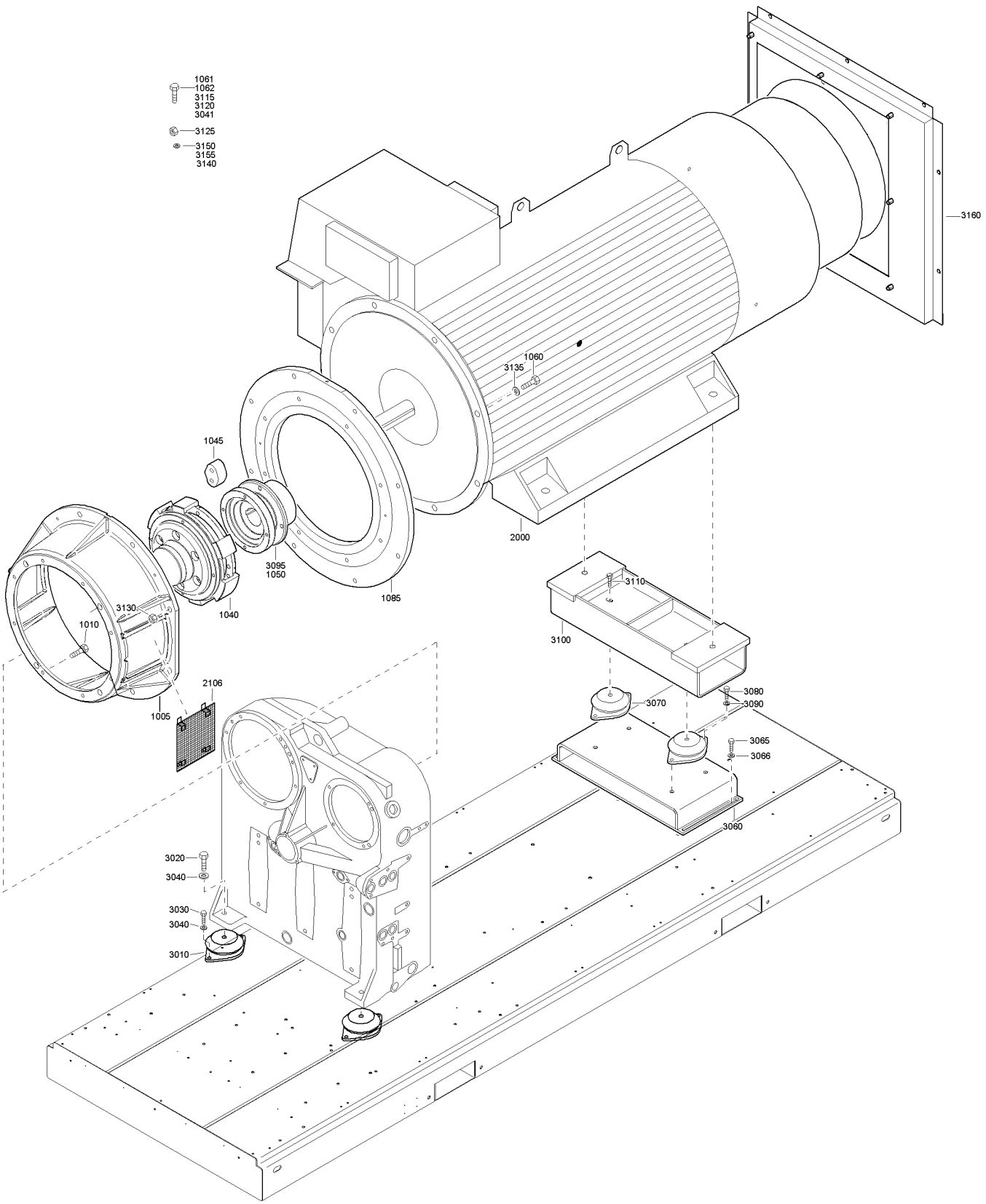
1061
1062
3115
3120
3041
3125
3150
3155
3140
3160
1060
3135
1045
2000
3095
1050
1085
1040
3130
1010
3110
3100
2106
1005
3080
3090
3070
3065
3066
3060
3020
3040
3030
3040
3010

Drive arrangement

Ref.	Part number	Qty	Name	Remarks
3125	1903 2058 13	2	Hex nut	
3130	0266 2114 00	2	Hexagon nut	
3135	0300 0274 53	2	Plain washer	
3140	0301 2378 00	1	Plain washer	
3145	0301 2408 00	2	Washer	
3150	0301 2358 00	2	Plain washer	
3155	0333 2153 00	2	Spring washer	
			ZT160 7.5 bar(e)	
			160KW,3.3KV S	
			ZT160 8.6 bar(e)	
			160KW,3.3KV S	
			ZT160 10 bar(e)	
			160KW,3.3KV S	
			Drive arrg.complete	
1005	1621 1428 00	1	Coupling housing	
1010	0147 1405 03	8	Hex.bolt	
1040	1621 1534 02	1	Coupling half	
1045	1619 6467 04	1	Set-rubbers	
1050	1621 1535 01	1	Coupling half	
1060	0147 1554 00	8	Hex.bolt	
1085	9096 4731 13	1	Reducing ring	
2000	9096 4904 00	1	Motor	
2106	1621 1673 00	2	Guard	
3010	9096 4671 00	2	Anti vibration mount	
3020	0147 1962 35	2	Hex.bolt	
3030	0147 1400 00	4	Hex.bolt	
3040	0301 2358 00	4	Plain washer	
3060	1621 3148 00	1	Support	
3065	0147 1401 00	4	Hex.bolt	
3066	0300 0274 92	4	Washer	
3070	9096 3915 00	2	Rubber buffer	
3080	0147 1400 00	4	Hex.bolt	
3090	0301 2358 00	4	Plain washer	
3095	9096 3690 07	1	Coupling - Motor.side	
3100	9096 4948 00	1	Motor support	
3105	0147 1554 00	2	Hex.bolt	
3110	0147 1413 00	2	Hex.bolt	
3115	0147 1480 00	2	Hex.bolt	
3120	0147 1480 00	1	Hex.bolt	
3125	0261 1090 51	2	Hex.nut	
3130	0266 2114 00	2	Hexagon nut	
3135	0301 2378 00	2	Plain washer	
3140	0301 2378 00	1	Plain washer	
3145	0301 2393 00	2	Plain washer	
3150	0301 2358 00	2	Plain washer	
3155	0333 2149 00	2	Spring washer	
			ZT200 7.5 bar(e)	
			200KW,3.3KV S	
			ZT200 8.6 bar(e)	
			200KW,3.3KV S	
			ZT 200 10 bar(e)	
			200KW,3.3KV S	
			Drive arrg.complete	
1005	1621 1428 00	1	Coupling housing	
1010	0147 1405 03	8	Hex.bolt	
1040	1621 1534 02	1	Coupling half	
1045	1619 6467 04	1	Set-rubbers	
1050	1621 1535 01	1	Coupling half	
1060	0147 1554 00	8	Hex.bolt	
1061	0147 1554 00	2	Hex.bolt	
1085	9096 4731 13	1	Reducing ring	
2000	9096 4905 00	1	Motor	
2106	1621 1673 00	2	Guard	
3010	9096 4671 00	2	Anti vibration mount	
3020	0147 1962 35	2	Hex.bolt	
3030	0147 1400 00	4	Hex.bolt	
3040	0301 2358 00	4	Plain washer	
3060	1621 3148 00	1	Support	
3065	0147 1401 00	4	Hex.bolt	
3066	0300 0274 92	4	Washer	
3070	9096 3915 00	2	Rubber buffer	
3080	0147 1400 00	4	Hex.bolt	
3090	0301 2358 00	4	Plain washer	
3095	9096 3690 07	1	Coupling	
3100	9096 4948 00	1	Motor support	
3110	0147 1413 00	2	Hex.bolt	
3115	0147 1480 00	2	Hex.bolt	
3120	0147 1480 00	1	Hex.bolt	
3125	0261 1090 51	2	Hex.nut	
3130	0266 2114 00	2	Hexagon nut	
3135	0301 2378 00	2	Plain washer	
3140	0301 2378 00	1	Plain washer	
3145	0301 2393 00	2	Plain washer	
3150	0301 2358 00	2	Plain washer	
3155	0333 2149 00	2	Spring washer	
			ZT250 7.5 bar(e)	
			250KW,3.3KV S	
			ZT250 8.6 bar(e)	
			250KW,3.3KV S	
			ZT250 10 bar(e)	
			250KW,3.3KV S	
			Drive arrg.complete	
1005	1621 3729 00	1	Coupling housing	
1010	0147 1405 03	8	Hex.bolt	
1040	1621 1534 02	1	Coupling half	
1045	1619 6467 04	1	Set-rubbers	
1050	1621 1535 01	1	Coupling half	
1060	0147 1554 00	8	Hex.bolt	
1061	0147 1632 03	2	Bolt	
2000	9096 4906 00	1	Motor	
2106	1621 1673 00	2	Guard	
3010	9096 3915 00	2	Rubber buffer	
3020	0147 1962 35	2	Hex.bolt	
3030	0147 1400 00	4	Hex.bolt	
3040	0301 2358 00	4	Plain washer	
3041	0147 1552 03	8	Bolt	
3060	1621 3148 00	1	Support	
3065	0147 1401 00	4	Hex.bolt	
3066	0300 0274 92	4	Washer	
3070	9096 3915 00	2	Rubber buffer	
3080	0147 1398 00	4	Hex.bolt	
3090	0301 2358 00	4	Plain washer	
3095	9096 3690 07	1	Coupling	
3100	9096 4948 00	1	Motor support	
3110	0147 1413 00	2	Hex.bolt	
3115	0147 1962 35	2	Hex.bolt	
3120	0147 1480 00	1	Hex.bolt	
3125	1903 2058 13	2	Hex nut	
3130	0266 2114 00	2	Hexagon nut	
3135	0300 0274 53	2	Plain washer	
3140	0301 2378 00	1	Plain washer	
3145	0301 2408 00	2	Washer	
3150	0301 2358 00	2	Plain washer	
3155	0333 2153 00	2	Spring washer	
			ZT275 7.5 bar(e)	
			275KW,3.3KV S	
			Drive arrg.complete	
1005	1621 3729 00	1	Coupling housing	

24

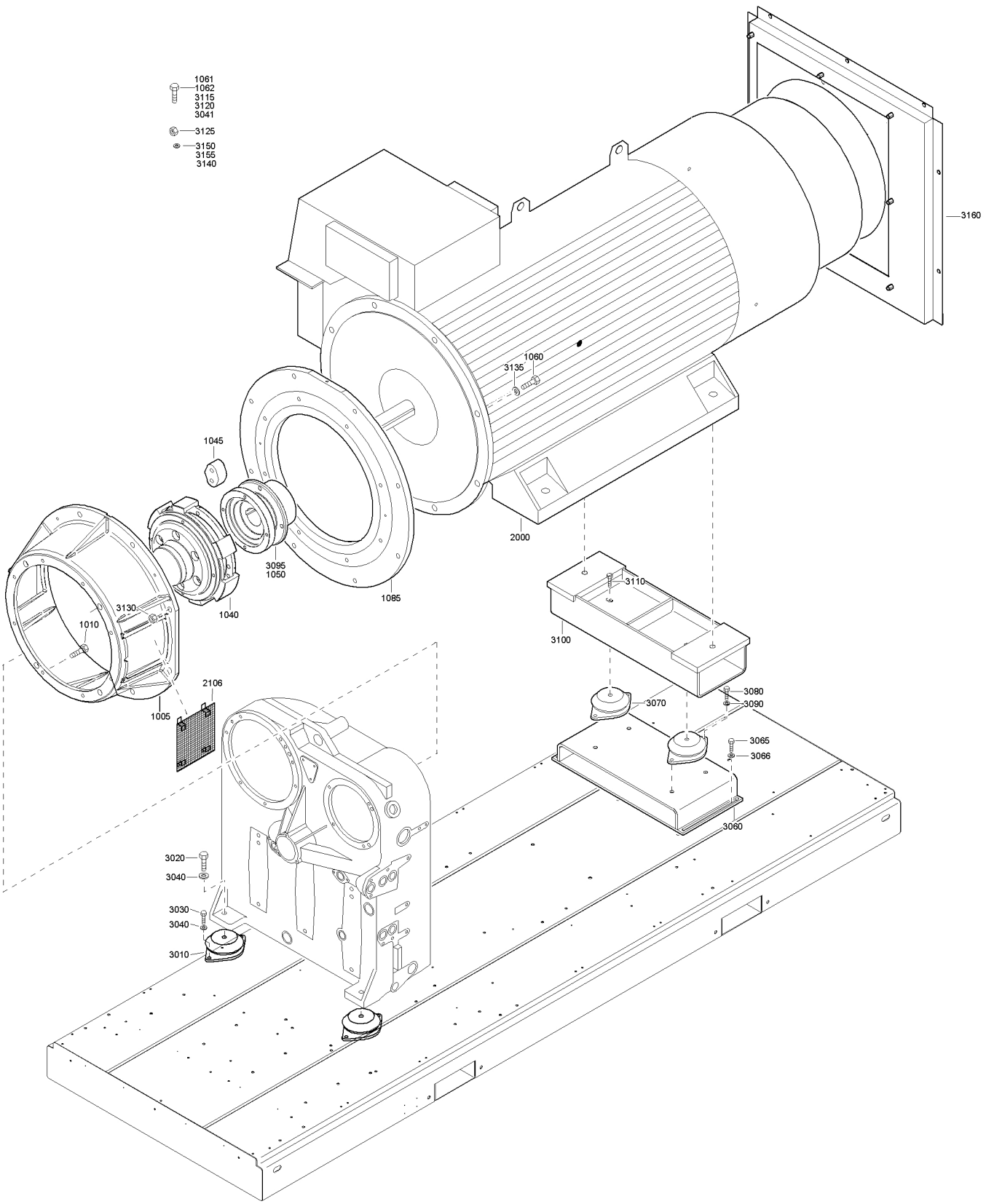
1061
1062
3115
3120
3041
3125
3150
3155
3140
3160
1060
3135
1045
2000
3095
1050
1085
3110
3130
1040
1010
3100
2106
1005
3080
3090
3070
3065
3066
3060
3020
3040
3030
3040
3010

Drive arrangement

24

Ref.	Part number	Qty	Name	Remarks
1010	0147 1405 03	8	Hex.bolt	
1040	1621 1534 02	1	Coupling half	
1045	1619 6467 04	1	Set-rubbers	
1050	1621 1535 01	1	Coupling half	
1060	0147 1554 00	8	Hex.bolt	
1061	0147 1632 03	2	Bolt	
2000	9096 4907 00	1	Motor	
2106	1621 1673 00	2	Guard	
3010	9096 3915 00	2	Rubber buffer	
3020	0147 1962 35	2	Hex.bolt	
3030	0147 1400 00	4	Hex.bolt	
3040	0301 2358 00	4	Plain washer	
3041	0147 1552 03	8	Bolt	
3060	1621 3148 00	1	Support	
3065	0147 1401 00	4	Hex.bolt	
3066	0300 0274 92	4	Washer	
3070	9096 3915 00	2	Rubber buffer	
3080	0147 1398 00	4	Hex.bolt	
3090	0301 2358 00	4	Plain washer	
3095	9096 3690 07	1	Coupling	
3100	9096 4946 00	1	Motor support	
3110	0147 1413 00	2	Hex.bolt	
3115	0147 1962 35	2	Hex.bolt	
3120	0147 1480 00	1	Hex.bolt	
3125	1903 2058 13	2	Hex nut	
3130	0266 2114 00	2	Hexagon nut	
3135	0300 0274 53	2	Plain washer	
3140	0301 2378 00	1	Plain washer	
3145	0301 2408 00	2	Washer	
3150	0301 2358 00	2	Plain washer	
3155	0333 2153 00	2	Spring washer	
			ZT275 8.6 bar(e)	
			275KW,3.3KV S	
			ZT275 10 bar(e)	
			275KW,3.3KV S	
			Drive arrg.complete	
1005	1621 3729 00	1	Coupling housing	
1010	0147 1405 03	8	Hex.bolt	
1040	1621 1534 02	1	Coupling half	
1045	1619 6467 04	1	Set-rubbers	
1050	1621 1535 01	1	Coupling half	
1060	0147 1554 00	8	Hex.bolt	
1061	0147 1632 03	2	Bolt	
2000	9096 4917 00	1	Motor	
2106	1621 1673 00	2	Guard	
3010	9096 3915 00	2	Rubber buffer	
3020	0147 1962 35	2	Hex.bolt	
3030	0147 1400 00	4	Hex.bolt	
3040	0301 2358 00	4	Plain washer	
3041	0147 1552 03	8	Bolt	
3060	1621 3148 00	1	Support	
3065	0147 1401 00	4	Hex.bolt	
3066	0300 0274 92	4	Washer	
3070	9096 3915 00	2	Rubber buffer	
3080	0147 1398 00	4	Hex.bolt	
3090	0301 2358 00	4	Plain washer	
3095	9096 3690 02	1	Coupling half	
3100	9096 4947 00	1	Motor support	
3110	0147 1413 00	2	Hex.bolt	
3115	0147 1962 35	2	Hex.bolt	
3120	0147 1480 00	1	Hex.bolt	
3125	1903 2058 13	2	Hex nut	
3130	0266 2114 00	2	Hexagon nut	
3135	0300 0274 53	2	Plain washer	
3140	0301 2378 00	1	Plain washer	
3145	0301 2408 00	2	Washer	
3150	0301 2358 00	2	Plain washer	
3155	0333 2153 00	2	Spring washer	
			ZT160 7.5 bar(e)	
			160KW,6.6KV S	
			ZT160 8.6 bar(e)	
			160KW,6.6KV S	
			ZT160 10 bar(e)	
			160KW,6.6KV S	
			Drive arrg.complete	
1005	1621 3729 00	1	Coupling housing	
1010	0147 1405 03	8	Hex.bolt	
1040	1621 1534 02	1	Coupling half	
1045	1619 6467 04	1	Set-rubbers	
1050	1621 1535 01	1	Coupling half	
1060	0147 1554 00	8	Hex.bolt	
1061	0147 1632 03	2	Bolt	
2000	9096 4910 00	1	Motor	
2106	1621 1673 00	2	Guard	
3010	9096 4671 00	2	Anti vibration mount	
3020	0147 1962 35	2	Hex.bolt	
3030	0147 1400 00	4	Hex.bolt	
3040	0301 2358 00	4	Plain washer	
3060	1621 3148 00	1	Support	
3065	0147 1401 00	4	Hex.bolt	
3066	0300 0274 92	4	Washer	
3070	9096 3915 00	2	Rubber buffer	
3080	0147 1398 00	4	Hex.bolt	
3090	0301 2358 00	4	Plain washer	
3095	9096 3690 03	1	Coupling half	
3100	9096 4946 00	1	Motor support	
3110	0147 1413 00	2	Hex.bolt	
3115	0147 1962 35	2	Hex.bolt	
3120	0147 1480 00	1	Hex.bolt	
3125	1903 2058 13	2	Hex nut	
3130	0266 2114 00	2	Hexagon nut	
3135	0300 0274 53	2	Plain washer	
3140	0301 2378 00	1	Plain washer	
3145	0301 2408 00	2	Washer	
3150	0301 2358 00	2	Plain washer	
3155	0333 2153 00	2	Spring washer	
			ZT200 7.5 bar(e)	
			200KW,6.6KV S	
			ZT200 8.6 bar(e)	
			200KW,6.6KV S	
			ZT200 10 bar(e)	
			200KW,6.6KV S	
			Drive arrg.complete	
1005	1621 3729 00	1	Coupling housing	
1010	0147 1405 03	8	Hex.bolt	
1040	1621 1534 02	1	Coupling half	
1045	1619 6467 04	1	Set-rubbers	
1050	1621 1535 01	1	Coupling half	
1060	0147 1554 00	8	Hex.bolt	
1061	0147 1632 03	2	Bolt	
2000	9096 4911 00	1	Motor	
2106	1621 1673 00	2	Guard	
3010	9096 4671 00	2	Anti vibration mount	
3020	0147 1962 35	2	Hex.bolt	
3030	0147 1400 00	4	Hex.bolt	
3040	0301 2358 00	4	Plain washer	
3060	1621 3148 00	1	Support	
3065	0147 1401 00	4	Hex.bolt	

24

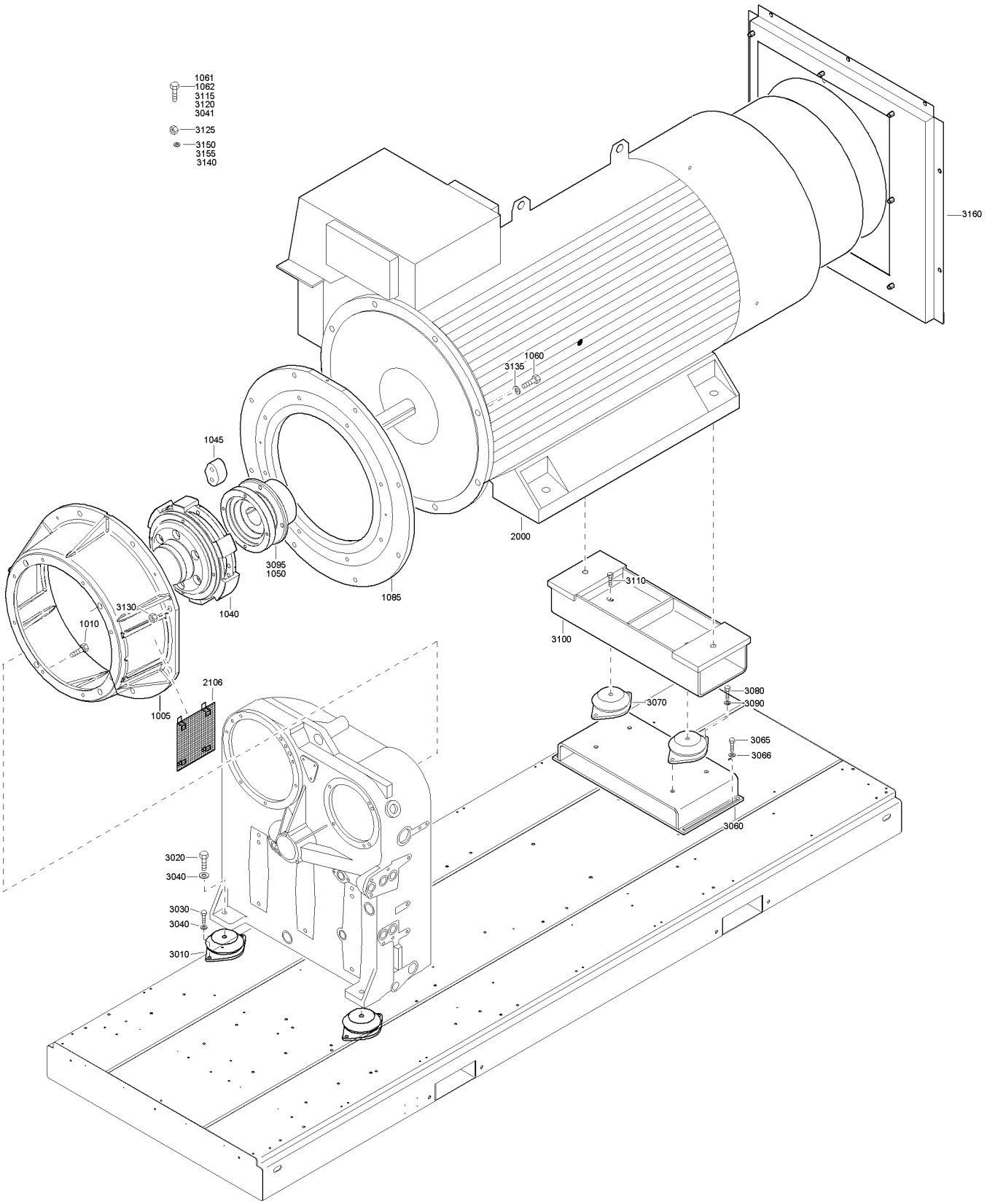
1061
1062
3115
3120
3041
3125
3150
3155
3140
3160
1060
3135
1045
2000
3095
1050
1085
1040
3130
1010
3110
3100
2106
1005
3080
3090
3070
3065
3066
3060
3020
3040
3030
3040
3010

Drive arrangement

Ref.	Part number	Qty	Name	Remarks
3066	0300 0274 92	4	Washer	
3070	9096 3915 00	2	Rubber buffer	
3080	0147 1398 00	4	Hex.bolt	
3090	0301 2358 00	4	Plain washer	
3095	9096 3690 03	1	Coupling half	
3100	9096 4946 00	1	Motor support	
3110	0147 1413 00	2	Hex.bolt	
3115	0147 1962 35	2	Hex.bolt	
3120	0147 1480 00	1	Hex.bolt	
3125	1903 2058 13	2	Hex nut	
3130	0266 2114 00	2	Hexagon nut	
3135	0300 0274 53	2	Plain washer	
3140	0301 2378 00	1	Plain washer	
3145	0301 2408 00	2	Washer	
3150	0301 2358 00	2	Plain washer	
3155	0333 2153 00	2	Spring washer	
			ZT250 7.5 bar(e)	
			250KW,6.6KV S	
			ZT250 8.6 bar(e)	
			250KW,6.6KV S	
			ZT250 10 bar(e)	
			250KW,6.6KV S	
			Drive arrg.complete	
1005	1621 3729 00	1	Coupling housing	
1010	0147 1405 03	8	Hex.bolt	
1040	1621 1534 02	1	Coupling half	
1045	1619 6467 04	1	Set-rubbers	
1050	1621 1535 01	1	Coupling half	
1060	0147 1554 00	8	Hex.bolt	
1061	0147 1632 03	2	Bolt	
2000	9096 4912 00	1	Motor	
2106	1621 1673 00	2	Guard	
3010	9096 3915 00	2	Rubber buffer	
3020	0147 1962 35	2	Hex.bolt	
3030	0147 1400 00	4	Hex.bolt	
3040	0301 2358 00	4	Plain washer	
3041	0147 1552 03	8	Bolt	
3060	1621 3148 00	1	Support	
3065	0147 1401 00	4	Hex.bolt	
3066	0300 0274 92	4	Washer	
3070	9096 3915 00	2	Rubber buffer	
3080	0147 1398 00	4	Hex.bolt	
3090	0301 2358 00	4	Plain washer	
3095	9096 3690 02	1	Coupling half	
3100	9096 4947 00	1	Motor support	
3110	0147 1413 00	2	Hex.bolt	
3115	0147 1962 35	2	Hex.bolt	

Ref.	Part number	Qty	Name	Remarks
3120	0147 1480 00	1	Hex.bolt	
3125	1903 2058 13	2	Hex nut	
3130	0266 2114 00	2	Hexagon nut	
3135	0300 0274 53	2	Plain washer	
3140	0301 2378 00	1	Plain washer	
3145	0301 2408 00	2	Washer	
3150	0301 2358 00	2	Plain washer	
3155	0333 2153 00	2	Spring washer	
			ZT 275 7.5 bar(e)	
			275KW,6.6KV S	
			ZT275 8.6 bar(e)	
			275KW,6.6KV S	
			ZT275 10 bar(e)	
			275KW,6.6KV S	
			Drive arrg.complete	
1005	1621 3729 00	1	Coupling housing	
1010	0147 1405 03	8	Hex.bolt	
1040	1621 1534 02	1	Coupling half	
1045	1619 6467 04	1	Set-rubbers	
1050	1621 1535 01	1	Coupling half	
1060	0147 1554 00	8	Hex.bolt	
1061	0147 1632 03	2	Bolt	
2000	9096 4916 00	1	Motor	
2106	1621 1673 00	2	Guard	
3010	9096 3915 00	2	Rubber buffer	
3020	0147 1962 35	2	Hex.bolt	
3030	0147 1400 00	4	Hex.bolt	
3040	0301 2358 00	4	Plain washer	
3041	0147 1552 03	8	Bolt	
3060	1621 3148 00	1	Support	
3065	0147 1401 00	4	Hex.bolt	
3066	0300 0274 92	4	Washer	
3070	9096 3915 00	2	Rubber buffer	
3080	0147 1398 00	4	Hex.bolt	
3090	0301 2358 00	4	Plain washer	
3095	9096 3690 02	1	Coupling half	
3100	9096 4947 00	1	Motor support	
3110	0147 1413 00	2	Hex.bolt	
3115	0147 1962 35	2	Hex.bolt	
3120	0147 1480 00	1	Hex.bolt	
3125	1903 2058 13	2	Hex nut	
3130	0266 2114 00	2	Hexagon nut	
3135	0300 0274 53	2	Plain washer	
3140	0301 2378 00	1	Plain washer	
3145	0301 2408 00	2	Washer	
3150	0301 2358 00	2	Plain washer	
3155	0333 2153 00	2	Spring washer	

25

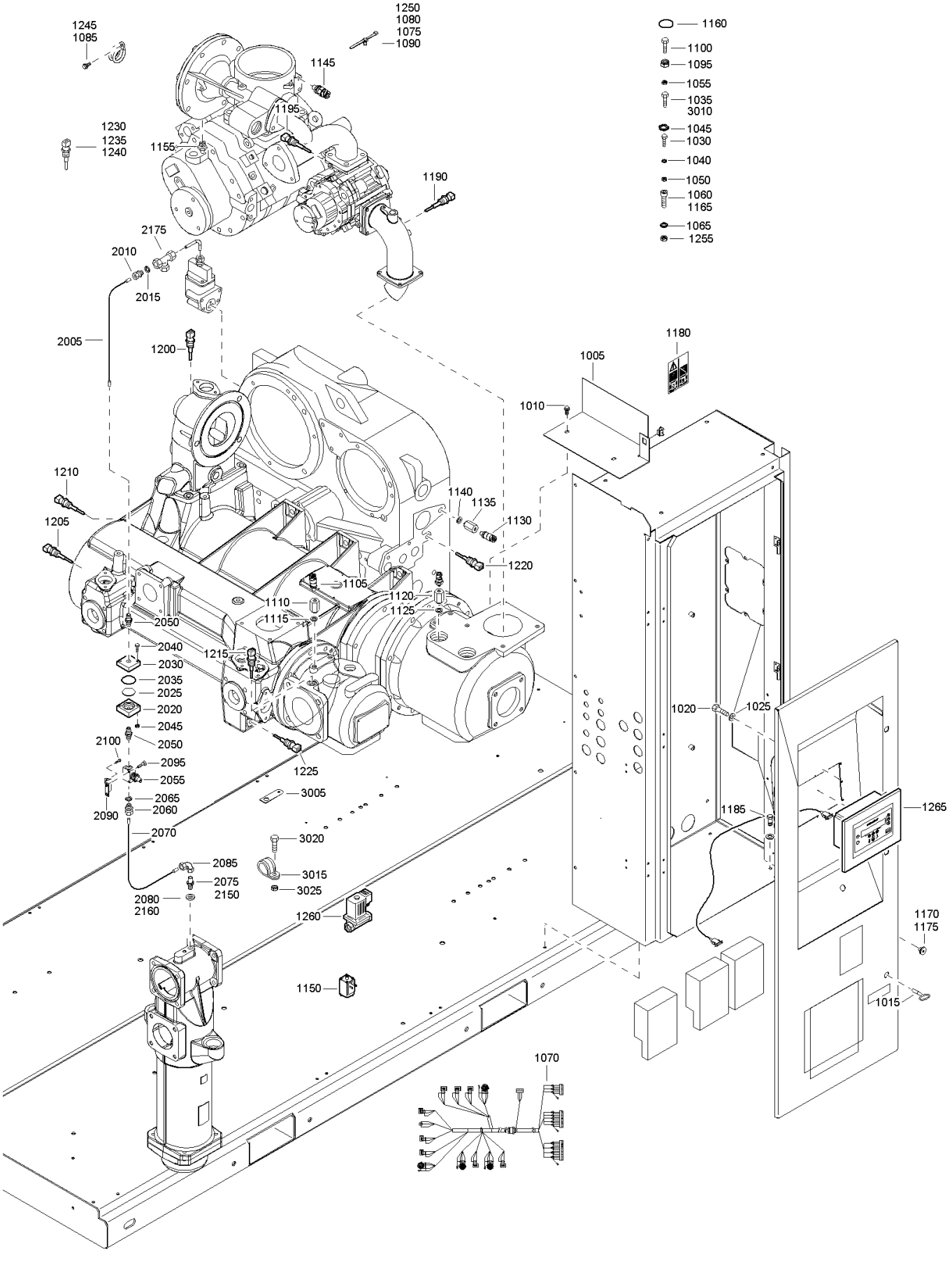
1245
1085
1250
1080
1075
1090
1145
1195
1230
1235
1240
1155
1190
2175
2010
2015
2005
1200
1160
1100
1095
1055
1035
3010
1045
1030
1040
1050
1060
1165
1065
1255
1180
1005
1010
1210
1205
1140
1135
1130
1220
1105
1110
1115
1120
1125
2050
2040
2030
2035
2025
2020
2045
2050
1215
2100
2095
2055
2065
2060
2090
2070
1225
3005
3020
3015
3025
2085
2075
2150
2080
2160
1260
1150
1070
1020
1025
1185
1265
1170
1175
1015

Regulation system - ZR

Ref.	Part number		Qty	Name	Remarks
1005	1621 2602 00		1	Plate	
1010	1619 2766 00		2	Paint stripping bolt	
1015	1089 9154 02		1	Key cubicle	
1020	0160 6038 00		4	Slotted screw	
1025	0301 2315 00		4	Plain washer	
1030	0147 1322 03		11	Hex. head screw	
1035	0147 1246 00		1	Hex.bolt	
1040	0333 3227 00		3	Spring washer	
1045	0333 3220 00		1	Lock washer	
1050	0266 2110 00		1	Hexagon nut	
1055	0266 2108 00		1	Hex.nut	
1060	0211 1397 03		1	Cap screw	
1065	0333 3237 00		1	Lock washer	
1070	1621 6816 00		1	Wire harness	
1075	1088 1301 01		10	Cable tie	
1080	0348 0102 08		4	Cable tie	
1085	1619 2766 00		1	Paint stripping bolt	
1090	0348 0102 09		2	Cable tie	
1095	0291 1108 00		2	Lock nut	
1100	0147 1360 03		4	Hex. head screw	
1105	1089 9625 16		1	Pressure sensor	
1110	**1621 1247 80**		**1**	**Nipple**	
	1621 1247 00	•	1	Nipple	
	1621 1248 00	•	1	Nipple	
	1621 1249 00	•	1	Bushing	
1115	0661 1000 25		1	Seal washer	
1120	**1621 1247 80**		**1**	**Nipple**	
	1621 1247 00	•	1	Nipple	
	1621 1248 00	•	1	Nipple	
	1621 1249 00	•	1	Bushing	
1125	0661 1000 25		1	Seal washer	
1130	1089 9625 12		1	Pressure sensor	
1135	**1621 1247 80**		**1**	**Nipple**	
	1621 1247 00	•	1	Nipple	
	1621 1248 00	•	1	Nipple	
	1621 1249 00	•	1	Bushing	
1140	0661 1000 25		1	Seal washer	
1145	1089 9625 18		1	Pressure sensor	
1150	1089 0590 21		1	Solenoid valve	
1155	1619 2689 00		1	Filter plug	
1160	0663 2108 63		3	O-Ring	
1165	0211 1251 03		4	Hex.socket cap screw	
1170	1614 6596 00		2	Knurled nut	
1175	0223 4000 35		2	Shoulder screw	
1180	1079 9901 67		1	Lable	
1185	1619 2766 00		4	Paint stripping bolt	

Ref.	Part number	Qty	Name	Remarks
1190	1089 0574 70	1	Temp sensor	
1195	1089 0574 70	1	Temp sensor	
1200	1089 0574 70	1	Temp sensor	
1205	1089 0574 70	1	Temp sensor	
1210	1089 0574 70	1	Temp sensor	
1215	1089 0574 70	1	Temp sensor	
1220	1089 0574 70	1	Temp sensor	
1225	1089 0574 70	1	Temp sensor	
1230	1089 0574 70	1	Temp sensor	
1235	1089 0574 70	1	Temp sensor	
1240	1089 0574 70	1	Temp sensor	
1245	1619 2766 00	6	Paint stripping bolt	
1250	0348 0102 09	2	Cable tie	
1255	1619 5898 01	2	Hex.bolt	
1260	1089 0640 44	1	Solenoid valve	
1265	1900 0710 32	1	Regulator	
			Kit	
2005	1623 6353 05	1	Flexible hose assembly	
2010	0580 0013 32	1	Connector	
2015	0661 1000 25	1	Seal washer	
2020	1621 1382 00	1	Flange	
2025	1621 0735 00	1	Filter element	
2030	1621 1383 00	1	Flange	
2035	0663 2132 00	1	O-Ring	
2040	0147 1252 03	2	Hex.bolt	
2045	0266 2108 00	2	Hex.nut	
2050	0603 4100 44	2	Hex. nipple	
2055	1621 7443 00	1	Valve	
2060	0580 0013 32	1	Connector	
2065	0661 1000 25	1	Seal washer	
2070	1623 6353 05	1	Flexible hose assembly	
2075	0580 0506 00	1	Straight coupling	
2080	0661 1000 25	1	Seal washer	
2085	0580 3404 00	1	Pipe coupling	
2090	1621 7672 00	1	Support	
2095	0147 1322 03	2	Hex. head screw	
2100	0211 1170 03	4	Hexagon socket screw	
			Connection	
2150	0580 0506 00	1	Str.coupling	
2160	0661 1000 25	1	Seal washer	
2175	1903 4701 07	1	Equal tee	
3005	1621 3189 00	1	Bracket	
3010	0147 1397 03	1	Hex.bolt	
3015	1613 0801 05	1	Hose clamp	
3020	0147 1244 00	1	Hex.bolt	
3025	0266 2108 00	1	Hex.nut	

26

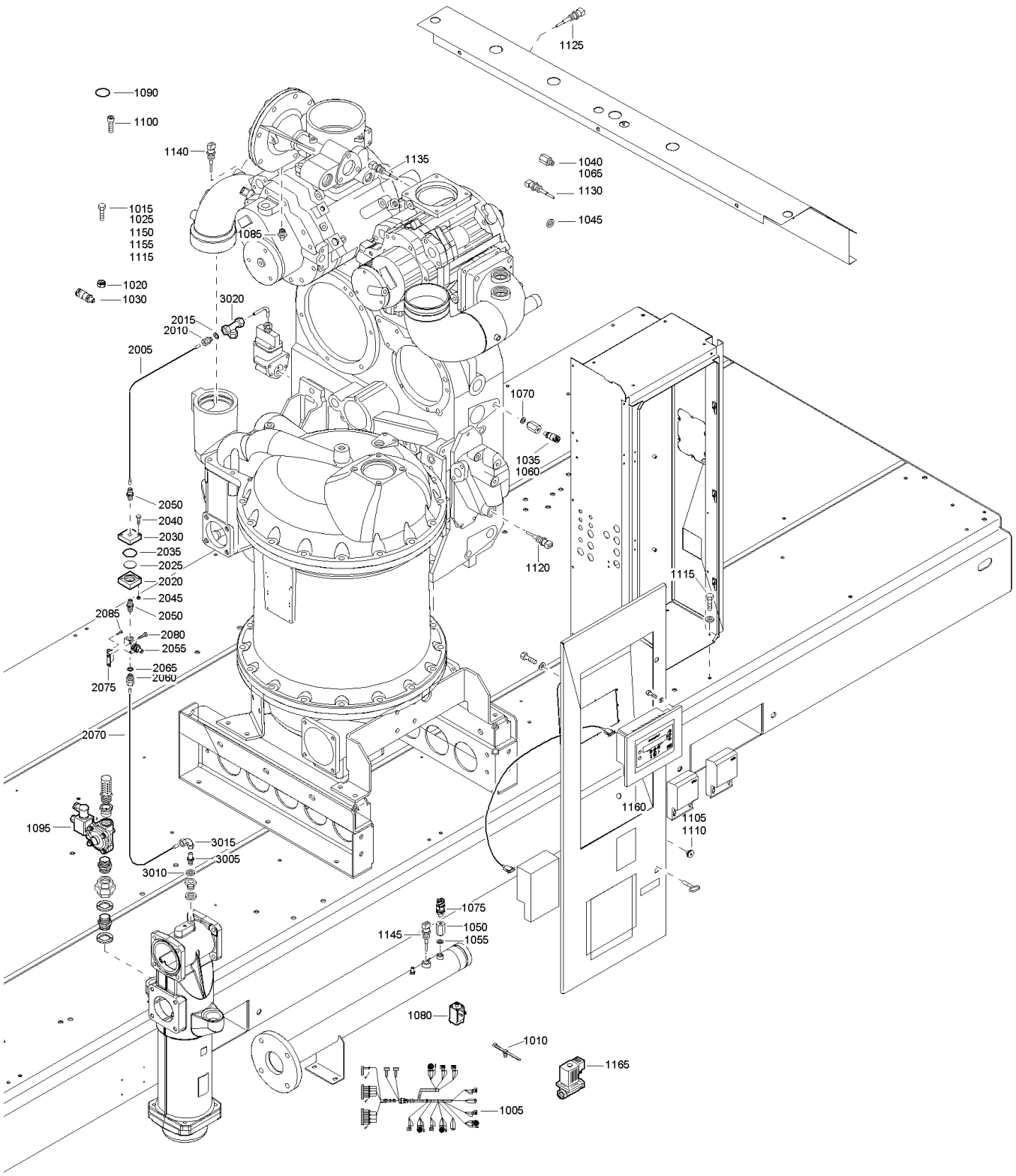
1125
1090
1100
1140
1135
1040
1065
1130
1045
1015
1025
1150
1155
1115
1085
1020
1030
3020
2015
2010
2005
1070
1035
1060
1120
1115
2050
2040
2030
2035
2025
2020
2045
2085
2050
2080
2055
2065
2060
2075
2070
1160
1105
1110
1095
3015
3005
3010
1075
1145
1050
1055
1080
1010
1165
1005

Regulation system - ZT

26

Ref.	Part number		Qty	Name	Remarks
1005	1621 6818 00		1	Wire harness	
1010	1088 1301 01		10	Cable tie	
1015	1619 2766 00		1	Paint stripping bolt	
1020	0291 1108 00		2	Lock nut	
1025	0147 1360 03		4	Hex. head screw	
1030	1089 9625 16		1	Pressure sensor	
1035	1089 9625 12		1	Pressure sensor	
1040	**1621 1247 80**		**1**	**Nipple**	
	1621 1247 00	•	1	Nipple	
	1621 1248 00	•	1	Nipple	
	1621 1249 00	•	1	Bushing	
1045	0661 1000 25		1	Seal washer	
1050	**1621 1247 80**		**1**	**Nipple**	
	1621 1247 00	•	1	Nipple	
	1621 1248 00	•	1	Nipple	
	1621 1249 00	•	1	Bushing	
1055	0661 1000 25		1	Seal washer	
1060	1089 9625 12		1	Pressure sensor	
1065	**1621 1247 80**		**1**	**Nipple**	
	1621 1247 00	•	1	Nipple	
	1621 1248 00	•	1	Nipple	
	1621 1249 00	•	1	Bushing	
1070	0661 1000 25		1	Seal washer	
1075	1089 9625 18		1	Pressure sensor	
1080	1089 0590 21		1	Solenoid valve	
1085	1619 2689 00		1	Filter plug	
1090	0663 2108 63		3	O-Ring	
1095	1623 2495 00		1	Blow down valve	
1100	0211 1251 03		4	Hex.socket cap screw	
1105	1614 6596 00		2	Knurled nut	
1110	0223 4000 35		2	Shoulder screw	
1115	1619 2766 00		4	Paint stripping bolt	
1120	1089 0574 70		1	Temp sensor	
1125	1089 0574 70		1	Temp sensor	
1130	1089 0574 70		1	Temp sensor	
1135	1089 0574 70		1	Temp sensor	
1140	1089 0574 70		1	Temp sensor	
1145	1089 0574 70		1	Temp sensor	
1150	1619 2766 00		6	Paint stripping bolt	
1155	1619 5898 01		4	Hex.bolt	
1160	1900 0710 32		1	Regulator	
1165	1089 0640 44		1	Solenoid valve	
				Kit	
2005	1621 7655 00		1	Pipe	
2010	0580 0013 32		1	Connector	
2015	0661 1000 25		1	Seal washer	
2020	1621 1382 00		1	Flange	
2025	1621 0735 00		1	Filter element	
2030	1621 1383 00		1	Flange	
2035	0663 2132 00		1	O-Ring	
2040	0147 1252 03		2	Hex.bolt	
2045	0266 2108 00		2	Hex.nut	
2050	0603 4100 44		2	Hex. nipple	
2055	1621 7443 00		1	Valve	
2060	0580 0013 32		1	Connector	
2065	0661 1000 25		1	Seal washer	
2070	1623 6353 03		1	Flexible hose assembly	
2075	1621 7672 00		1	Support	
2080	0147 1322 03		2	Hex. head screw	
2085	0211 1170 03		4	Hexagon socket screw	
				Connection	
3005	0580 0506 00		1	Str.coupling	
3010	0661 1000 25		1	Seal washer	
3015	0580 3404 00		1	Pipe coupling	
				Connection	
3020	1903 4701 07		1	Equal tee	

27

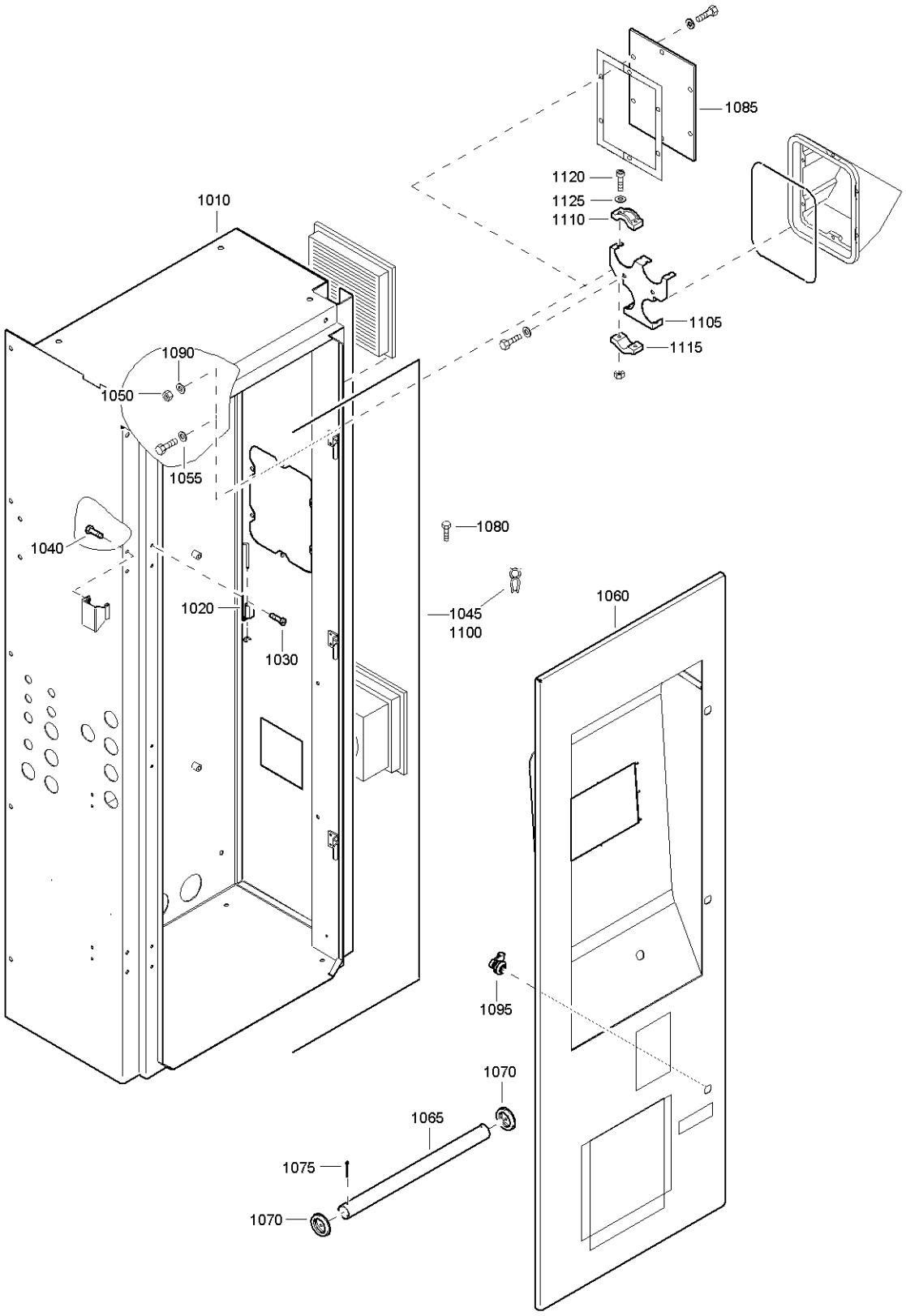
1085
1120
1125
1110
1010
1105
1115
1090
1050
1055
1080
1040
1045
1100
1020
1030
1060
1095
1070
1065
1075
1070

Bodywork Cubicle Box

27

Ref.	Part number	Qty	Name	Remarks
			For ZR	
1010	9096 4181 00	1	Cubicle	
1020	1621 2547 00	2	Hinge	
1030	0216 1204 00	4	Screw	
1040	0160 6105 00	4	Screw	
1045	1619 6449 00	AR	Seal	
1050	0266 2110 00	2	Hexagon nut	
1055	0301 2335 00	4	Plain washer	
1060	9096 4569 15	1	Cubicle door	
1065	1621 2596 00	1	Handgrip	
1070	0989 4220 07	2	Grommet	
1075	0111 1313 00	2	Split pin	
1080	1619 2766 00	2	Paint stripping bolt	
1085	1614 7146 00	1	Flange	
1090	0301 2335 00	12	Plain washer	
			For ZT	
1010	9096 4181 00	1	Cubicle Box	
1020	1621 2547 00	2	Hinge	
1030	0216 1204 00	4	Screw	
1050	0266 2110 00	6	Hexagon nut	
1055	0301 2315 00	4	Plain washer	
1060	9096 4569 15	1	Cubicle Door	
1070	0989 4220 07	2	Grommet	
1075	0111 1313 00	2	Split pin	
1090	0301 2335 00	20	Plain washer	
1095	1089 9154 02	1	Key cubicle	
1100	1614 6567 00	1	Seal	
1105	1621 1309 00	1	Bracket	
1110	1614 6562 00	4	Clamp	
1115	1614 6563 00	4	Clamp	
1120	0147 1961 27	8	Bolt	
1125	0301 2321 00	8	Plain washer	

28

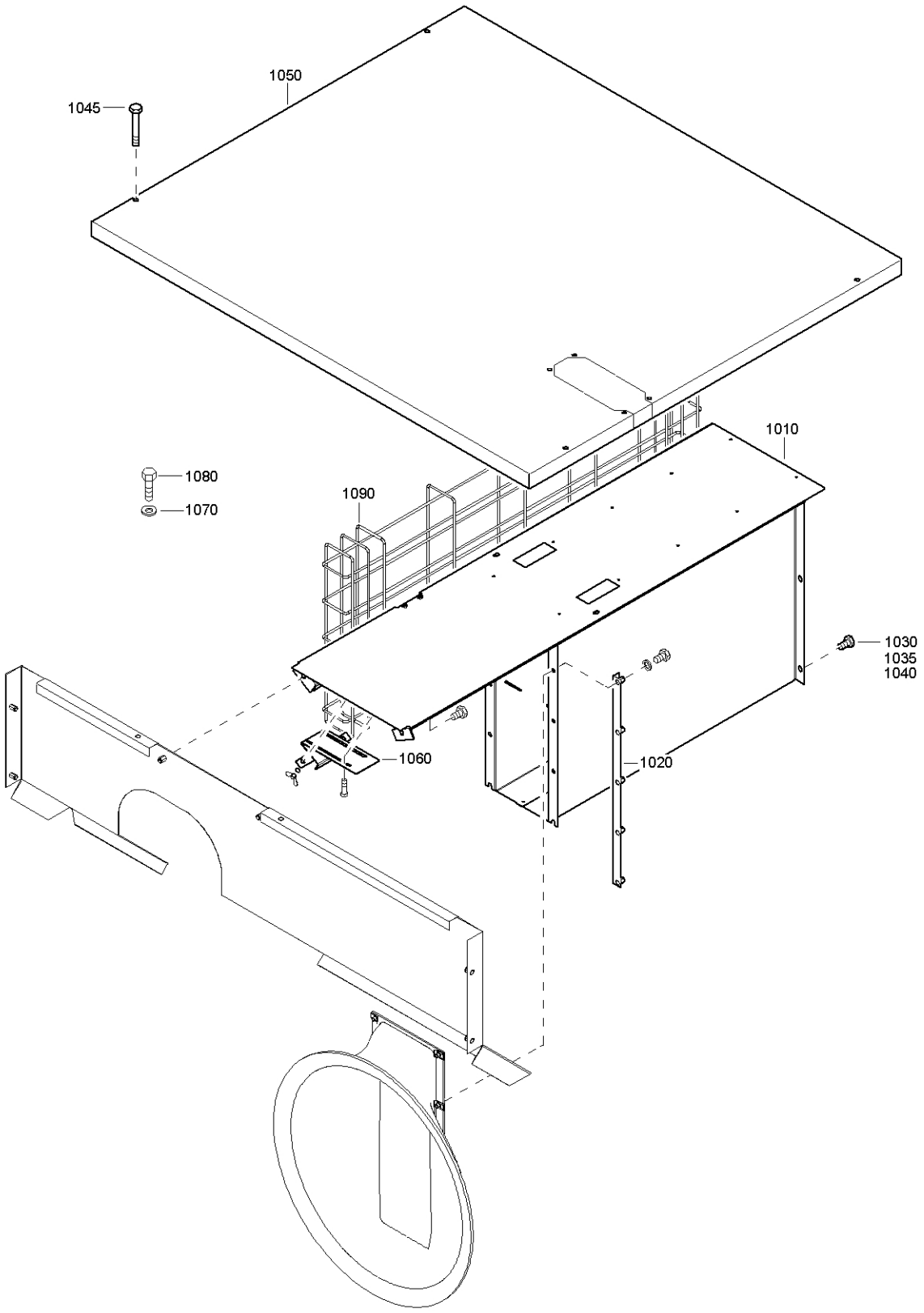

Bodywork Inlet Silencer

28

Ref.	Part number	Qty	Name	Remarks
			For ZR	
1010	9096 4952 10	1	Air inlet duct assembly	
1020	1621 2667 00	2	Plate	
1030	1619 2766 00	12	Paint stripping bolt	
1050	9096 4565 00	1	Roof	
1060	1621 2554 00	1	Bracket	
1090	9096 4953 50	1	Foam holder	
			For ZT	
1010	9096 4952 10	1	Air Inlet Duct	
1020	1621 2667 00	2	Plate	
1030	1619 2766 00	6	Paint stripping bolt	
1035	1619 2766 00	1	Paint stripping bolt	
1040	1619 2766 00	2	Paint stripping bolt	
1045	1619 2766 02	4	Paint stripping bolt	
1050	9096 4565 00	1	Roof	
1060	1621 2554 00	1	Bracket	
1070	0333 3227 00	3	Spring washer	
1080	0147 1322 03	7	Hex. head screw	
1090	9096 4953 50	1	Foam holder	

29

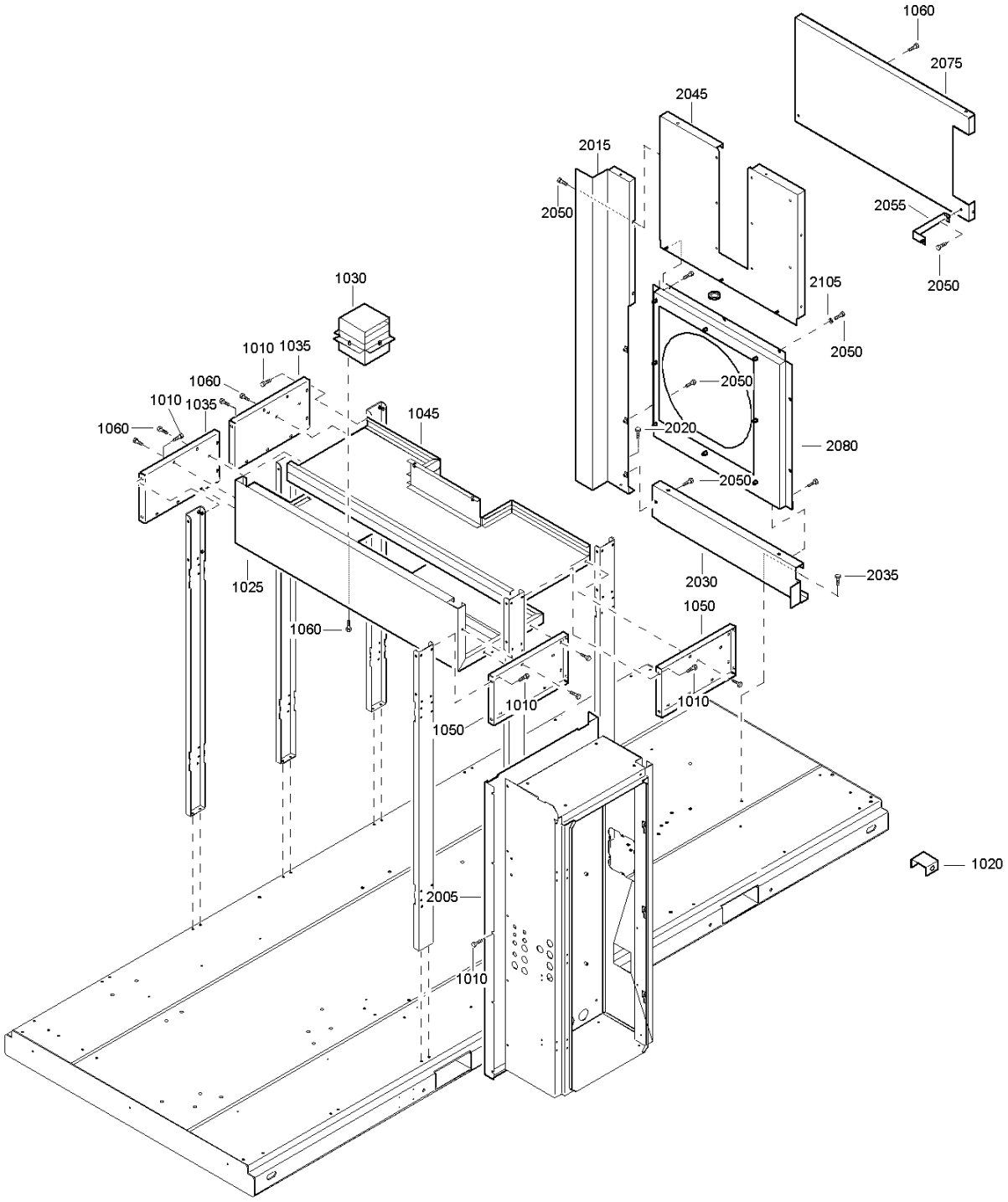
1060
2075
2045
2015
2050
2055
2050
1030
2105
2050
1010
1035
1060
1010
1035
1060
1045
2050
2020
2080
2050
1025
2030
2035
1060
1050
1010
1010
1050
1020
2005
1010

Bodywork ZR - Baffle

Ref.	Part number	Qty	Name	Remarks
			ZR160 7.5 bar(e) 190KW/ 3.3KV O	
			ZR160 8.6 bar(e) 175KW/ 3.3KV O	
			ZR160 10 bar(e) 165KW/ 3.3KV O	
			ZR200 7.5 bar(e) 240KW/ 3.3KV O	
			ZR200 8.6 bar(e) 220KW/ 3.3KV O	
			ZR200 10 bar(e) 200KW/ 3.3KV O	
			ZR250 10 bar(e) 255KW/ 3.3KV O	
			ZR160 7.5 bar(e) 200KW/ 3.3KV O	
			ZR160 8.6 bar(e) 190KW/ 3.3KV O	
			ZR160 10 bar(e) 175KW/ 3.3KV O	
			ZR200 7.5 bar(e) 255KW/ 3.3KV O	
			ZR200 8.6 bar(e) 240KW/ 3.3KV O	
			ZR200 10 bar(e) 220KW/ 3.3KV O	
1010	1619 2766 00	18	Paint stripping bolt	
1020	1621 2402 00	1	Bracket	
1025	9096 4782 00	1	Baffle	
1030	1621 2885 00	1	Silencer	
1035	1621 2503 00	2	Plate	
1045	9096 4755 00	1	Baffle	
1050	1621 2504 00	2	Plate	
1060	1079 1472 05	4	Screw	
2005	9096 4957 00	1	Plate	
2015	9096 4748 00	1	Panel	
2020	1619 2766 00	2	Paint stripping bolt	
2030	9096 4749 00	1	Panel	
2035	1619 2766 00	2	Paint stripping bolt	
2045	9096 4229 10	1	Panel	
2050	1079 1472 05	4	Screw	
2055	1621 2823 00	1	Bracket	
2075	9096 4580 00	1	Baffle	
2080	9096 4955 20	1	Motor baffle	
2105	0301 2335 00	2	Plain washer	

Ref.	Part number	Qty	Name	Remarks
			ZR160 7.5 bar(e) 190KW/ 6.6KV O	
			ZR160 8.6 bar(e) 175KW/ 6.6KV O	
			ZR160 10 bar(e) 165KW/ 6.6KV O	
			ZR200 7.5 bar(e) 240KW/ 6.6KV O	
			ZR200 8.6 bar(e) 220KW/ 6.6KV O	
			ZR200 10 bar(e) 200KW/ 6.6KV O	
			ZR160 7.5 bar(e) 200KW/ 6.6KV O	
			ZR160 8.6 bar(e) 190KW/ 6.6KV O	
			ZR160 10 bar(e) 175KW/ 6.6KV O	
			ZR200 7.5 bar(e) 255KW/ 6.6KV O	
			ZR200 8.6 bar(e) 240KW/ 6.6KV O	
			ZR200 10 bar(e) 220KW/ 6.6KV O	
1010	1619 2766 00	18	Paint stripping bolt	
1020	1621 2402 00	1	Bracket	
1025	9096 4782 00	1	Baffle	
1030	1621 2885 00	1	Silencer	
1035	1621 2503 00	2	Plate	
1045	9096 4755 00	1	Baffle	
1050	1621 2504 00	2	Plate	
1060	1079 1472 05	4	Screw	
2005	9096 4957 00	1	Plate	
2015	9096 4748 00	1	Panel	
2020	1619 2766 00	2	Paint stripping bolt	
2030	9096 4749 00	1	Panel	
2035	1619 2766 00	2	Paint stripping bolt	
2045	9096 4229 10	1	Panel	
2050	1079 1472 05	4	Screw	
2055	1621 2823 00	1	Bracket	
2075	9096 4580 00	1	Baffle	
2080	9096 4955 10	1	Motor baffle	
2105	0301 2335 00	2	Plain washer	
			ZR250 7.5 bar(e) 300KW/ 3.3KV O	

29

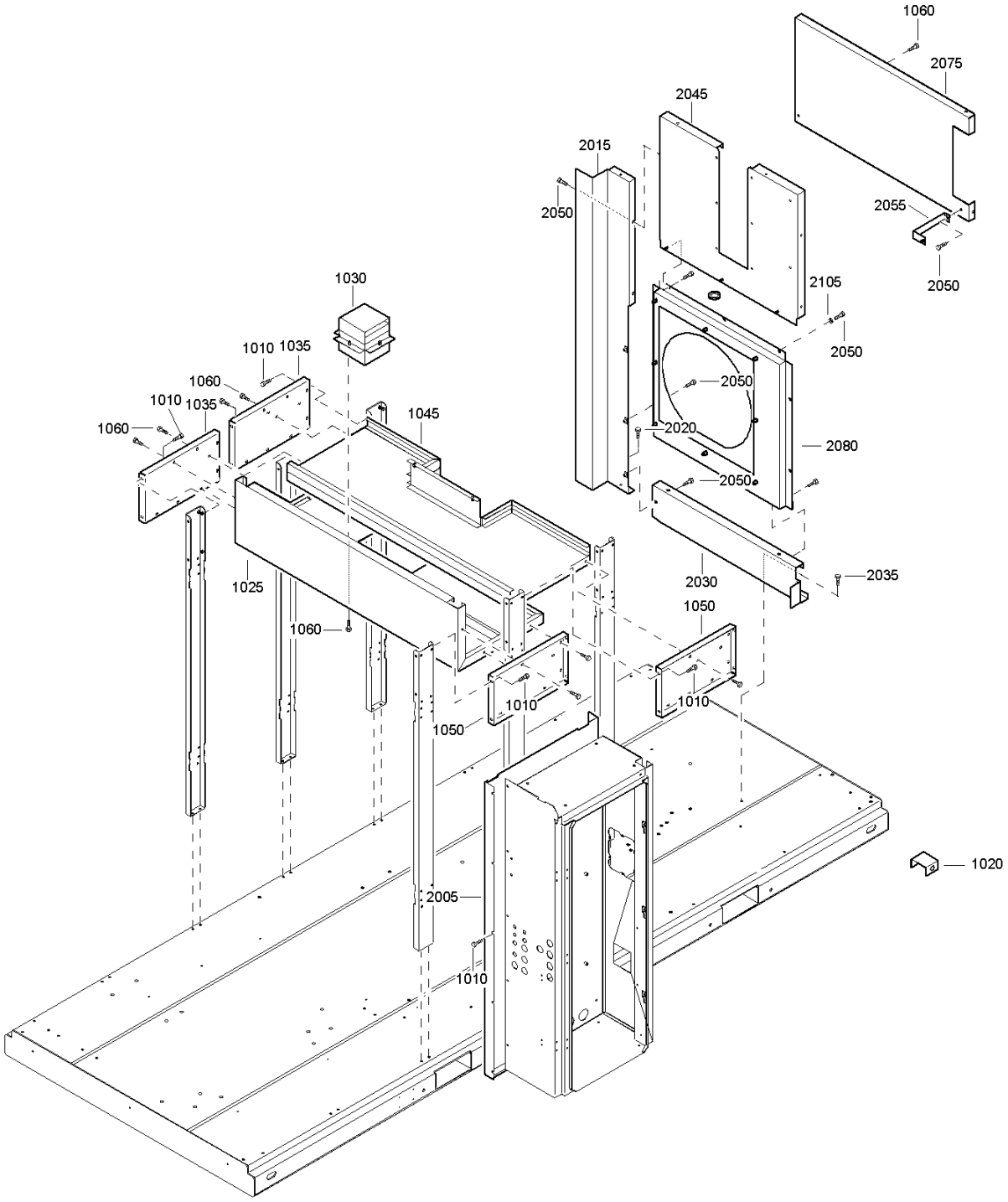
1060
2075
2045
2015
2050
2055
2050
1030
2105
1010
1035
2050
1060
1010
1035
2050
1045
1060
2020
2080
2050
1025
2030
2035
1060
1050
1010
1010
1050
1020
2005
1010

Bodywork ZR - Baffle

Ref.	Part number	Qty	Name	Remarks
			ZR250 8.6 bar(e) 280KW/ 3.3KV O	
			ZR250 7.5 bar(e) 300KW/ 6.6KV O	
			ZR250 8.6 bar(e) 280KW/ 6.6KV O	
			ZR250 10 bar(e) 255KW/ 6.6KV O	
			ZR250 7.5 bar(e) 320KW/ 3.3KV O	
			ZR250 8.6 bar(e) 300KW/ 3.3KV O	
			ZR250 10 bar(e) 280KW/ 3.3KV O	
			ZR250 7.5 bar(e) 320KW/ 6.6KV O	
			ZR250 8.6 bar(e) 300KW/ 6.6KV O	
			ZR250 10 bar(e) 280KW/ 6.6KV O	
1010	1619 2766 00	18	Paint stripping bolt	
1020	1621 2402 00	1	Bracket	
1025	9096 4782 00	1	Baffle	
1030	1621 2885 00	1	Silencer	
1035	1621 2503 00	2	Plate	
1045	9096 4755 00	1	Baffle	
1050	1621 2504 00	2	Plate	
1060	1079 1472 05	4	Screw	
2005	9096 4957 00	1	Plate	
2015	9096 4748 00	1	Panel	
2020	1619 2766 00	2	Paint stripping bolt	
2030	9096 4749 00	1	Panel	
2035	1619 2766 00	2	Paint stripping bolt	
2045	9096 4229 10	1	Panel	
2050	1079 1472 05	4	Screw	
2055	1621 2823 00	1	Bracket	
2075	9096 4580 00	1	Baffle	
2080	9096 4955 00	1	Motor baffle	
			ZR275 7.5 bar(e) 320KW/ 3.3KV O	
			ZR275 7.5 bar(e) 320KW/ 6.6KV O	
			ZR275 7.5 bar(e) 345KW/ 3.3KV O	
			ZR275 7.5 bar(e) 345KW/ 6.6KV O	
1010	1619 2766 00	18	Paint stripping bolt	
1020	1621 2402 00	1	Bracket	
1025	9096 4782 00	1	Baffle	
1030	1621 2885 00	1	Silencer	
1035	1621 2503 00	2	Plate	
1045	9096 4755 00	1	Baffle	
1050	1621 2504 00	2	Plate	
1060	1079 1472 05	4	Screw	
2005	9096 4957 00	1	Plate	
2015	9096 4748 00	1	Panel	
2020	1619 2766 00	2	Paint stripping bolt	
2030	9096 4749 00	1	Panel	
2035	1619 2766 00	2	Paint stripping bolt	
2045	9096 4229 10	1	Panel	
2050	1079 1472 05	4	Screw	
2055	1621 2823 00	1	Bracket	
2075	9096 4580 00	1	Baffle	
2105	0301 2335 00	2	Plain washer	

30

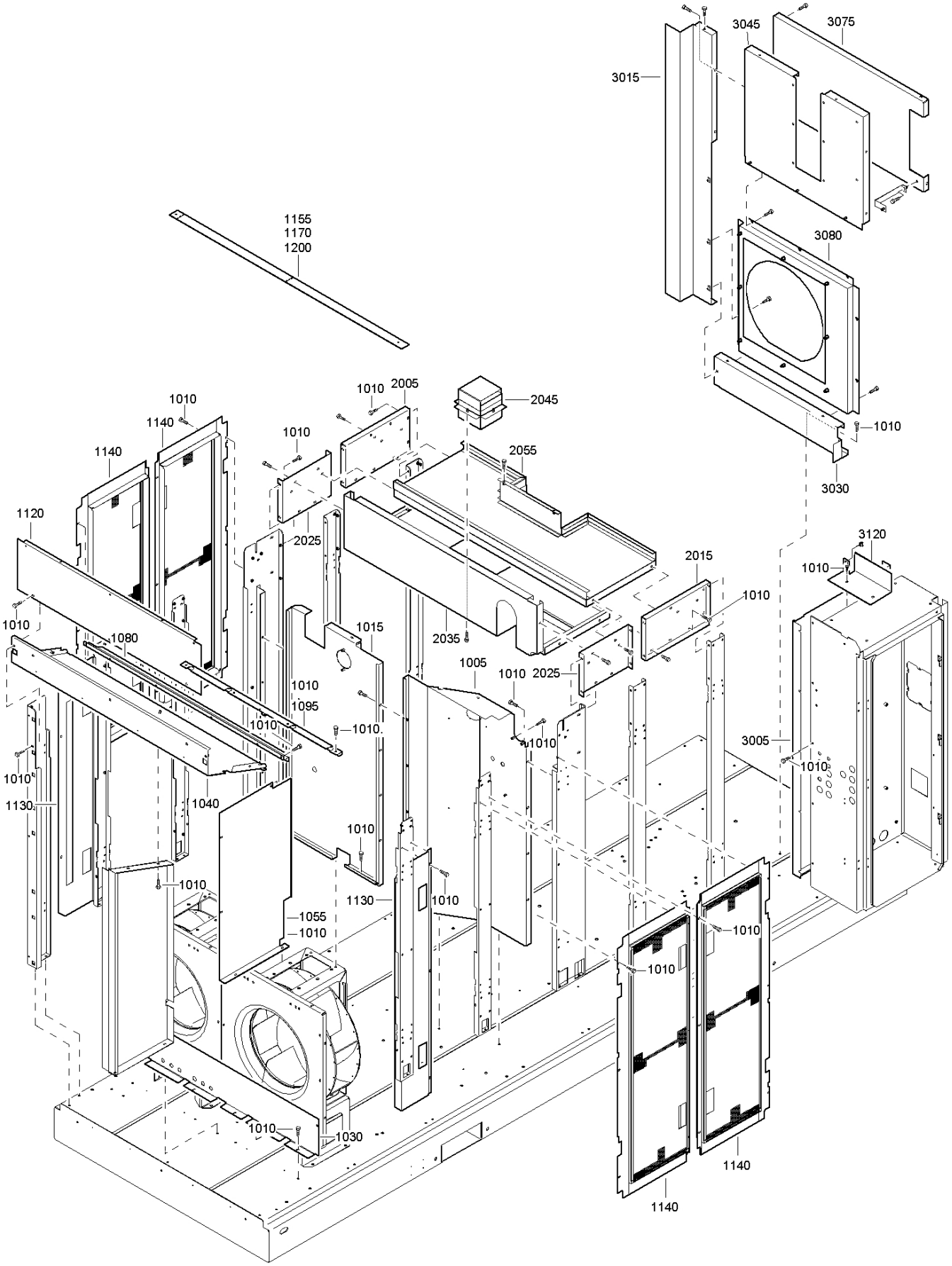
3045
3075
3015
1155
1170
1200
3080
1010
2005
2045
1010
1140
1010
1140
2055
1010
3030
1120
2025
3120
2015
1010
1010
1010
1080
1015
2035
1005
1010
2025
1010
1095
1010
1010
1010
3005
1010
1010
1130
1040
1010
1010
1130
1010
1055
1010
1010
1010
1010
1030
1140
1140

Bodywork ZT - Baffle

Ref.	Part number		Qty	Name	Remarks
				ZT160 7.5 bar(e)	
				160KW,3.3KV S	
				ZT160 8.6 bar(e)	
				160KW,3.3KV S	
				ZT160 10 bar(e)	
				160KW,3.3KV S	
				ZT200 7.5 bar(e)	
				200KW,3.3KV S	
				ZT200 8.6 bar(e)	
				200KW,3.3KV S	
				ZT 200 10 bar(e)	
				200KW,3.3KV S	
				ZT250 7.5 bar(e)	
				250KW,3.3KV S	
				ZT250 8.6 bar(e)	
				250KW,3.3KV S	
				ZT250 10 bar(e)	
				250KW,3.3KV S	
1005	9096 4757 00		1	Baffle	
1010	1619 2766 00		92	Paint stripping bolt	
1015	9096 4758 00		1	Baffle	
1030	1621 2911 00		1	Panel	
1040	**1621 2913 00**		**1**	**Panel**	
	1619 2795 00	•	AR	Rubber strip	
1055	1621 2392 00		1	Panel	
1080	1621 2912 00		1	Plate	
1095	1621 2507 00		1	Profile	
1120	1621 2446 00		1	Plate	
1130	1621 2914 00		2	Plate	
1140	1621 2497 00		4	Panel	
1155	1621 2916 00		4	Foam Holder	
1170	1621 2918 00		4	Foam Holder	
1200	1621 2921 00		4	Foam Holder	
2005	1621 2503 00		1	Plate	
2015	1621 2504 00		1	Plate	
2025	1621 2897 00		2	Plate	
2035	9096 4756 00		1	Baffle	
2045	**1621 2885 00**		**1**	**Silencer**	
	1621 2890 00	•	1	Profile	
2055	9096 4755 00		1	Baffle	
3005	9096 4957 00		1	Plate	
3015	**9096 4748 00**		**1**	**Panel**	
	1619 2473 00	•	AR	Seal	
3030	9096 4749 00		1	Panel	
3045	9096 4229 10		1	Panel	
3075	9096 4580 00		1	Baffle	
3080	9096 4955 20		1	Motor baffle	
3120	1621 2602 00		1	Plate	
				ZT160 7.5 bar(e)	
				160KW,6.6KV S	
				ZT160 8.6 bar(e)	
				160KW,6.6KV S	
				ZT160 10 bar(e)	
				160KW,6.6KV S	
				ZT200 7.5 bar(e)	
				200KW,6.6KV S	
				ZT200 8.6 bar(e)	
				200KW,6.6KV S	
				ZT200 10 bar(e)	
				200KW,6.6KV S	

Ref.	Part number		Qty	Name	Remarks
1005	9096 4757 00		1	Baffle	
1010	1619 2766 00		92	Paint stripping bolt	
1015	9096 4758 00		1	Baffle	
1030	1621 2911 00		1	Panel	
1040	**1621 2913 00**		**1**	**Panel**	
	1619 2795 00	•	AR	Rubber strip	
1055	1621 2392 00		1	Panel	
1080	1621 2912 00		1	Plate	
1095	1621 2507 00		1	Profile	
1120	1621 2446 00		1	Plate	
1130	1621 2914 00		2	Plate	
1140	1621 2497 00		4	Panel	
1155	1621 2916 00		4	Foam Holder	
1170	1621 2918 00		4	Foam Holder	
1200	1621 2921 00		4	Foam Holder	
2005	1621 2503 00		1	Plate	
2015	1621 2504 00		1	Plate	
2025	1621 2897 00		2	Plate	
2035	9096 4756 00		1	Baffle	
2045	**1621 2885 00**		**1**	**Silencer**	
	1621 2890 00	•	1	Profile	
2055	9096 4755 00		1	Baffle	
3005	9096 4957 00		1	Plate	
3015	**9096 4748 00**		**1**	**Panel**	
	1619 2473 00	•	AR	Seal	
3030	9096 4749 00		1	Panel	
3045	9096 4229 10		1	Panel	
3075	9096 4580 00		1	Baffle	
3080	9096 4955 20		1	Motor baffle	
3120	1621 2602 00		1	Plate	
				ZT250 7.5 bar(e)	
				250KW,6.6KV S	
				ZT250 8.6 bar(e)	
				250KW,6.6KV S	
				ZT250 10 bar(e)	
				250KW,6.6KV S	
				ZT 275 7.5 bar(e)	
				275KW,6.6KV S	
				ZT275 8.6 bar(e)	
				275KW,3.3KV S	
				ZT275 8.6 bar(e)	
				275KW,6.6KV S	
				ZT275 10 bar(e)	
				275KW,3.3KV S	
				ZT275 10 bar(e)	
				275KW,6.6KV S	
1005	9096 4757 00		1	Baffle	
1010	1619 2766 00		92	Paint stripping bolt	
1015	9096 4758 00		1	Baffle	
1030	1621 2911 00		1	Panel	
1040	**1621 2913 00**		**1**	**Panel**	
	1619 2795 00	•	AR	Rubber strip	
1055	1621 2392 00		1	Panel	
1080	1621 2912 00		1	Plate	
1095	1621 2507 00		1	Profile	
1120	1621 2446 00		1	Plate	
1130	1621 2914 00		2	Plate	
1140	1621 2497 00		4	Panel	
1155	1621 2916 00		4	Foam Holder	
1170	1621 2918 00		4	Foam Holder	

30

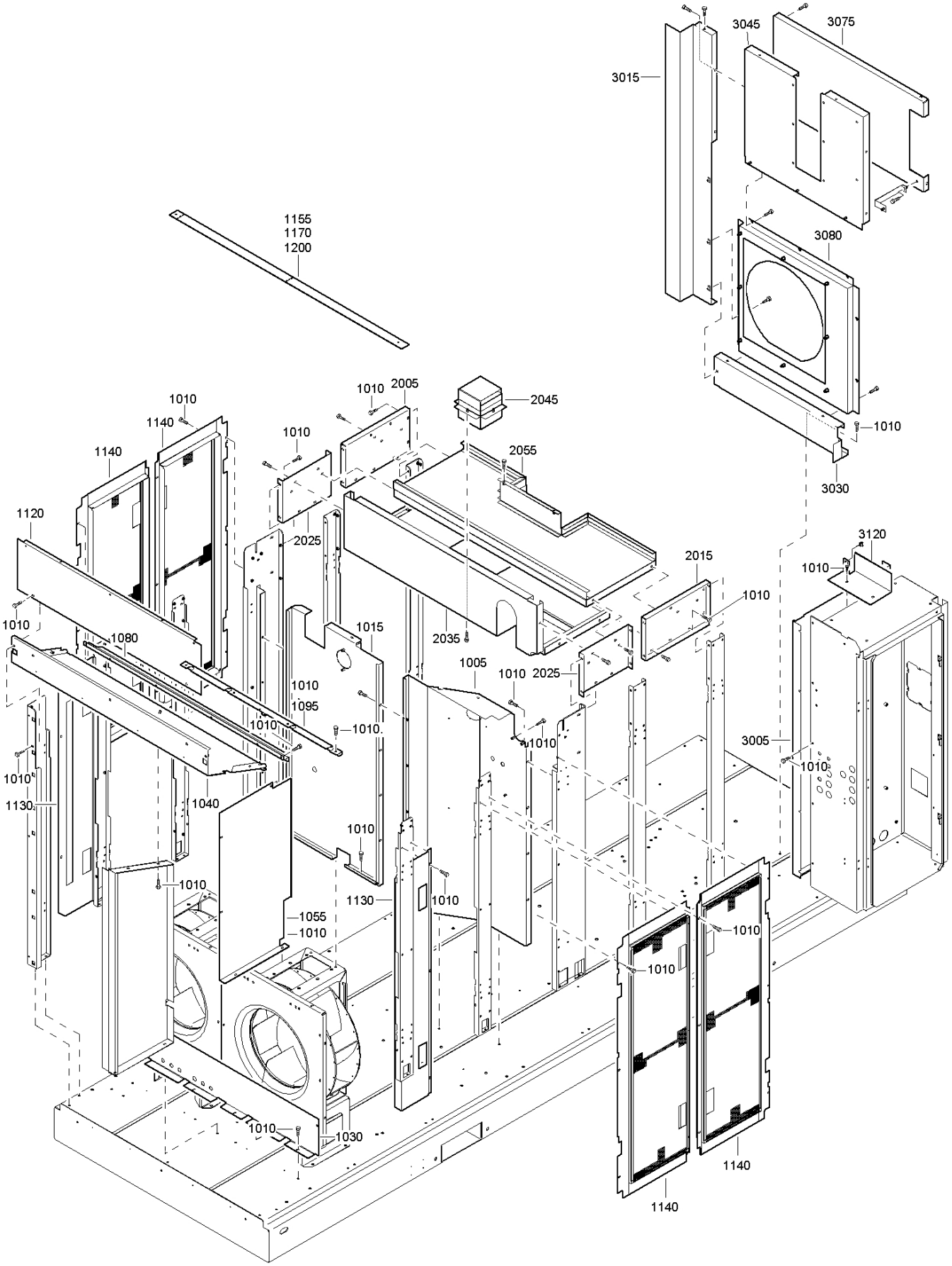
3045
3075
3015
1155
1170
1200
3080
1010
2005
2045
1010
1140
1140
1010
2055
1010
3030
1120
2025
3120
2015
1010
1010
1010
1080
1015
2035
1005
1010
2025
1010
1095
1010
1010
1010
3005
1010
1010
1130
1040
1010
1010
1130
1010
1055
1010
1010
1010
1010
1030
1140
1140

Bodywork ZT - Baffle

Ref.	Part number		Qty	Name	Remarks
1200	1621 2921 00		4	Foam Holder	
2005	1621 2503 00		1	Plate	
2015	1621 2504 00		1	Plate	
2025	1621 2897 00		2	Plate	
2035	9096 4756 00		1	Baffle	
2045	**1621 2885 00**		**1**	**Silencer**	
	1621 2890 00	•	1	Profile	
2055	9096 4755 00		1	Baffle	
3005	9096 4957 00		1	Plate	
3015	**9096 4748 00**		**1**	**Panel**	
	1619 2473 00	•	AR	Seal	
3030	9096 4749 00		1	Panel	
3045	9096 4229 10		1	Panel	
3075	9096 4580 00		1	Baffle	
3080	9096 4955 20		1	Motor baffle	
3120	1621 2602 00		1	Plate	
				ZT275 7.5 bar(e)	
				275KW,3.3KV S	
1005	9096 4757 00		1	Baffle	
1010	1619 2766 00		92	Paint stripping bolt	
1015	9096 4758 00		1	Baffle	
1030	1621 2911 00		1	Panel	
1040	**1621 2913 00**		**1**	**Panel**	
	1619 2795 00	•	AR	Rubber strip	
1055	1621 2392 00		1	Panel	

Ref.	Part number		Qty	Name	Remarks
1080	1621 2912 00		1	Plate	
1095	1621 2507 00		1	Profile	
1120	1621 2446 00		1	Plate	
1130	1621 2914 00		2	Plate	
1140	1621 2497 00		4	Panel	
1155	1621 2916 00		4	Foam Holder	
1170	1621 2918 00		4	Foam Holder	
1200	1621 2921 00		4	Foam Holder	
2005	1621 2503 00		1	Plate	
2015	1621 2504 00		1	Plate	
2025	1621 2897 00		2	Plate	
2035	9096 4756 00		1	Baffle	
2045	**1621 2885 00**		**1**	**Silencer**	
	1621 2890 00	•	1	Profile	
2055	9096 4755 00		1	Baffle	
3005	9096 4957 00		1	Plate	
3015	**9096 4748 00**		**1**	**Panel**	
	1619 2473 00	•	AR	Seal	
3030	9096 4749 00		1	Panel	
3045	9096 4229 10		1	Panel	
3075	9096 4580 00		1	Baffle	
3080	9096 4955 20		1	Motor baffle	
3120	1621 2602 00		1	Plate	

31

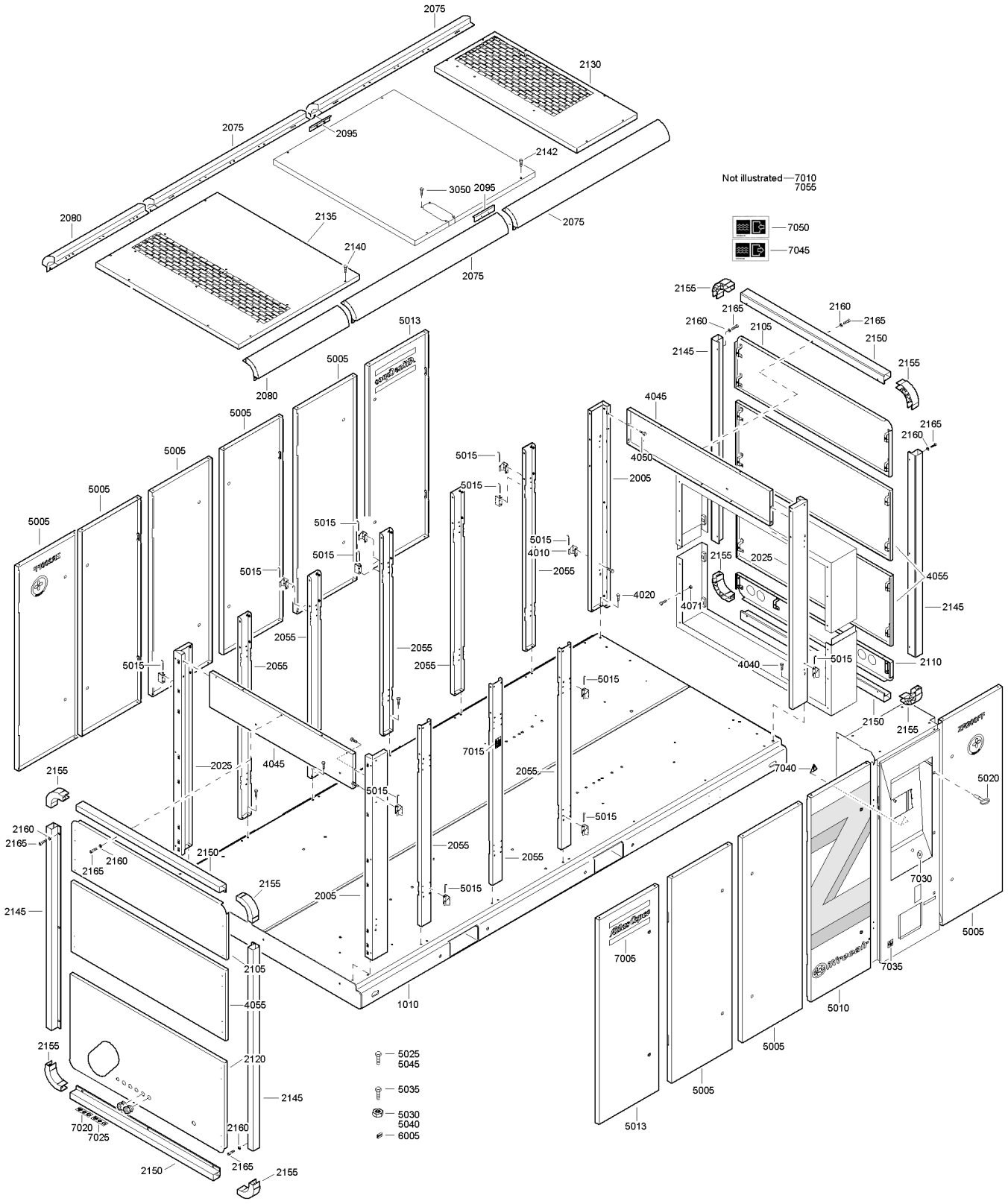
2075
2130
2075
2095
2142
3050
2095
2080
2135
2140
2075
2075
2080
Not illustrated 7010
7055
7050
7045
2155
2165
2160
2160
2165
2105
2150
2145
2155
5013
5005
4045
2165
2160
5005
5005
5015
4050
2005
5005
5015
5015
5015
5015
4010
2055
2155
2025
4055
5015
4020
4071
2145
2055
2055
2055
5015
2055
4040
5015
2110
5015
2150
2155
7015
2055
7040
5020
2155
2025
4045
5015
5015
2160
2165
2160
2165
2150
2055
2055
2155
2005
5015
7030
2145
5005
7005
7035
2105
1010
5010
4055
2155
5005
2120
5025
5045
5035
5005
2145
5030
5040
6005
7020
7025
2160
5013
2150
2165
2155

Bodywork ZR - Doors and Stays

Ref.	Part number		Qty	Name	Remarks
				ZR160 7.5 bar(e) 190KW/ 3.3KV O	
				ZR160 7.5 bar(e) 200KW/ 3.3KV O	
				ZR160 8.6 bar(e) 175KW/ 3.3KV O	
				ZR160 8.6 bar(e) 190KW/ 3.3KV O	
				ZR160 10 bar(e) 165KW/ 3.3KV O	
				ZR160 10 bar(e) 175KW/ 3.3KV O	
				ZR200 7.5 bar(e) 240KW/ 3.3KV O	
				ZR200 7.5 bar(e) 255KW/ 3.3KV O	
				ZR200 8.6 bar(e) 220KW/ 3.3KV O	
				ZR200 8.6 bar(e) 240KW/ 3.3KV O	
				ZR200 10 bar(e) 200KW/ 3.3KV O	
				ZR200 10 bar(e) 220KW/ 3.3KV O	
				ZR250 10 bar(e) 255KW/ 3.3KV O	
				Body work complete	
1010	9096 4800 30		1	Frame	
				Kit canopy	
2005	1621 2477 00		2	Stay	
2025	1621 2478 00		2	Stay	
2055	9096 4579 00		8	Stay	
2075	9096 4232 10		4	Beam	
2080	9096 4232 50		2	Beam	
2095	1621 2632 00		2	Plate	
2105	9096 4233 10		2	End panel	
2110	9096 4235 10		1	End panel	
2120	**9096 4236 10**		**1**	**End panel**	
	0581 0000 86	•	2	Pipe coupling	
	1621 9438 00	•	6	Pin	
	1615 7884 00	•	6	Clip	
2130	9095 4567 50		1	Roof	
2135	9096 4582 00		1	Roof	
2140	1619 2766 02		4	Paint stripping bolt	
2142	1619 2766 02		4	Paint stripping bolt	
2145	1621 5747 00		4	Profile	
2150	1621 5748 00		4	Profile	
2155	1621 2544 00		8	Profile	
2160	0300 0274 32		24	Plain washer	
2165	0211 1247 03		24	Hex sock. screw	
3050	1619 2766 00		6	Paint stripping bolt	
4010	1621 2538 00		24	Hinge	
4020	1619 2766 00		1	Paint stripping bolt	
4040	1619 2766 00		2	Paint stripping bolt	
4045	9096 4568 00		2	Panel	
4050	1079 1472 05		4	Screw	
4055	9096 4234 10		3	End panel	
4071	0300 0274 94		8	Plain washer	
5005	9096 4569 00		8	Door	
5010	9096 4569 11		1	Door	
5013	9096 4569 10		2	Door	
5015	1621 0607 00		26	Pin	
5020	1089 9068 01		1	Key	
5025	0160 6105 00		16	Screw	
5030	0298 1000 25		3	Nut	
5035	0147 1334 00		2	Hex.bolt	
5040	0261 1107 00		4	Nut	
5045	0160 6105 00		2	Screw	
6005	1619 2795 00		AR	Rubber strip	
				ZR160 7.5 bar(e) 190KW/ 6.6KV O	
				ZR160 7.5 bar(e) 200KW/ 6.6KV O	
				ZR160 8.6 bar(e) 175KW/ 6.6KV O	
				ZR160 8.6 bar(e) 190KW/ 6.6KV O	
				ZR160 10 bar(e) 165KW/ 6.6KV O	
				ZR160 10 bar(e) 175KW/ 6.6KV O	
				ZR200 7.5 bar(e) 240KW/ 6.6KV O	
				ZR200 7.5 bar(e) 255KW/ 6.6KV O	
				ZR200 8.6 bar(e) 220KW/ 6.6KV O	
				ZR200 8.6 bar(e) 240KW/ 6.6KV O	
				ZR200 10 bar(e) 200KW/ 6.6KV O	
				ZR200 10 bar(e) 220KW/ 6.6KV O	
				Bodywork complete	
1010	9096 4800 30		1	Frame	
				Kit canopy	
2005	1621 2477 00		2	Stay	
2025	1621 2478 00		2	Stay	
2055	9096 4579 00		8	Stay	
2075	9096 4232 10		4	Beam	
2080	9096 4232 50		2	Beam	
2095	1621 2632 00		2	Plate	
2105	9096 4233 10		2	End panel	
2110	9096 4235 10		1	End panel	
2120	**9096 4236 10**		**1**	**End panel**	
	0581 0000 86	•	2	Pipe coupling	
	1621 9438 00	•	6	Pin	
	1615 7884 00	•	6	Clip	
2130	9095 4567 50		1	Roof	
2135	9096 4582 00		1	Roof	
2140	1619 2766 02		4	Paint stripping bolt	
2142	1619 2766 02		4	Paint stripping bolt	
2145	1621 5747 00		4	Profile	
2150	1621 5748 00		4	Profile	
2155	1621 2544 00		8	Profile	
2160	0300 0274 32		24	Plain washer	
2165	0211 1247 03		24	Hex sock. screw	
3050	1619 2766 00		6	Paint stripping bolt	
4010	1621 2538 00		24	Hinge	
4020	1619 2766 00		1	Paint stripping bolt	
4040	1619 2766 00		2	Paint stripping bolt	
4045	9096 4568 00		2	Panel	
4050	1079 1472 05		4	Screw	
4055	9096 4234 10		3	End panel	
4071	0300 0274 94		8	Plain washer	
5005	9096 4569 00		8	Door	
5010	9096 4569 11		1	Door	
5013	9096 4569 10		2	Door	

31

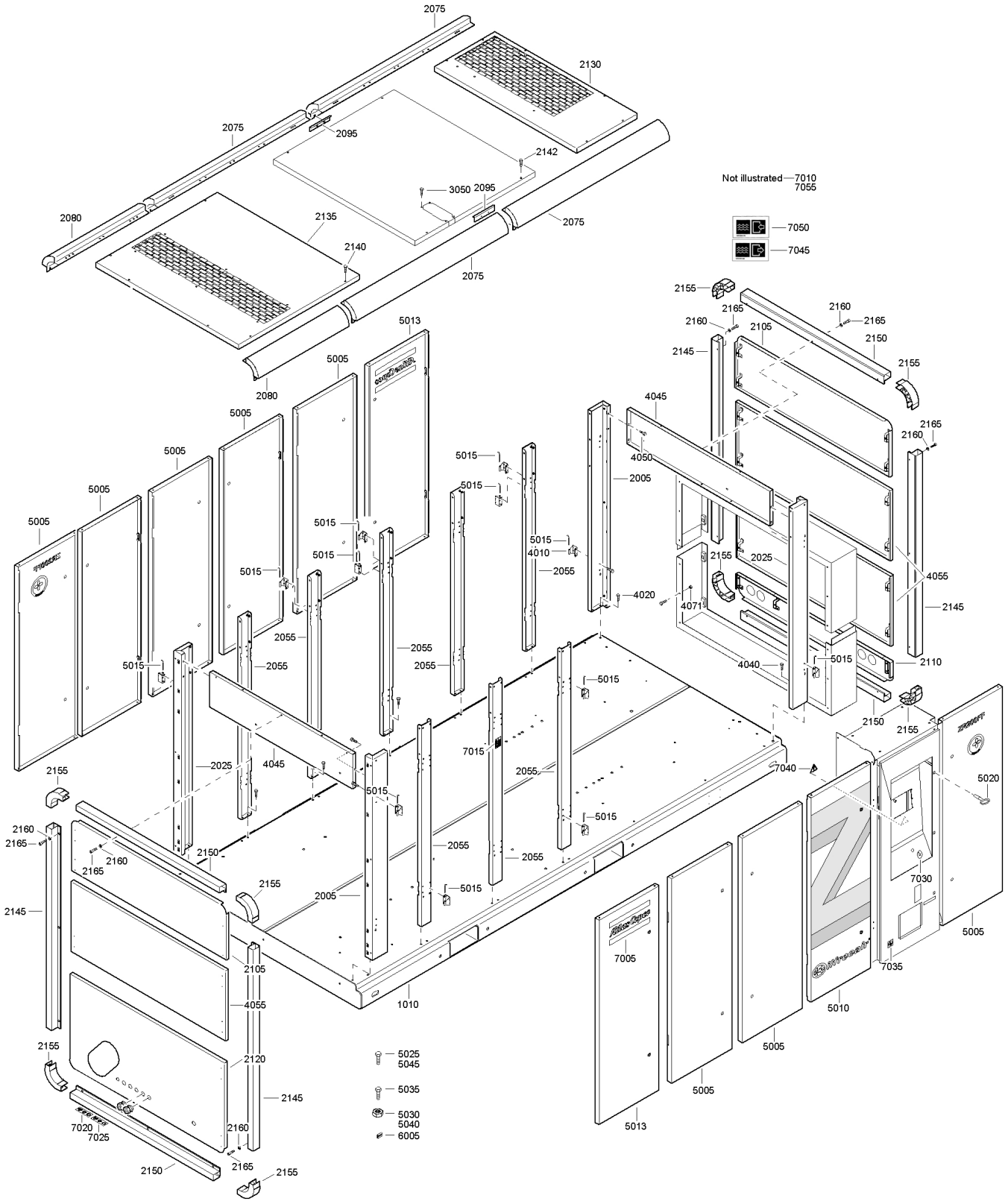
Not illustrated 7010
7055
7050
7045
2075
2130
2095
2142
3050
2080
2135
2140
2155
2165
2160
2105
2150
2145
4045
4050
2005
5013
5005
5015
4010
2055
4020
4071
2025
4055
2110
4040
7015
7040
5020
7030
7005
7035
5010
1010
2120
5025
5045
5035
5030
5040
6005
7020
7025

Bodywork ZR - Doors and Stays

Ref.	Part number		Qty	Name	Remarks
5015	1621 0607 00		26	Pin	
5020	1089 9068 01		1	Key	
5025	0160 6105 00		16	Screw	
5030	0298 1000 25		3	Nut	
5035	0147 1334 00		2	Hex.bolt	
5040	0261 1107 00		4	Nut	
5045	0160 6105 00		2	Screw	
6005	1619 2795 00		AR	Rubber strip	
				ZR250 7.5 bar(e) 300KW/ 3.3KV O	
				ZR250 7.5 bar(e) 300KW/ 6.6KV O	
				ZR250 7.5 bar(e) 320KW/ 3.3KV O	
				ZR250 7.5 bar(e) 320KW/ 6.6KV O	
				ZR250 8.6 bar(e) 280KW/ 3.3KV O	
				ZR250 8.6 bar(e) 280KW/ 6.6KV O	
				ZR250 8.6 bar(e) 300KW/ 3.3KV O	
				ZR250 8.6 bar(e) 300KW/ 6.6KV O	
				ZR250 10 bar(e) 255KW/ 6.6KV O	
				ZR250 10 bar(e) 280KW/ 3.3KV O	
				ZR250 10 bar(e) 280KW/ 6.6KV O	
				Body work complete	
1010	9096 4800 30		1	Frame	
				Kit canopy	
2005	1621 2477 00		2	Stay	
2025	1621 2478 00		2	Stay	
2055	9096 4579 00		8	Stay	
2075	9096 4232 10		4	Beam	
2080	9096 4232 50		2	Beam	
2095	1621 2632 00		2	Plate	
2105	9096 4233 10		2	End panel	
2110	9096 4235 10		1	End panel	
2120	**9096 4236 10**		**1**	**End panel**	
	0581 0000 86	•	2	Pipe coupling	
	1621 9438 00	•	6	Pin	
	1615 7884 00	•	6	Clip	
2130	9095 4567 50		1	Roof	
2135	9096 4582 00		1	Roof	
2140	1619 2766 02		4	Paint stripping bolt	
2142	1619 2766 02		4	Paint stripping bolt	
2145	1621 5747 00		4	Profile	
2150	1621 5748 00		4	Profile	
2155	1621 2544 00		8	Profile	
2160	0300 0274 32		24	Plain washer	
2165	0211 1247 03		24	Hex sock. screw	
3050	1619 2766 00		6	Paint stripping bolt	
4010	1621 2538 00		24	Hinge	
4020	1619 2766 00		1	Paint stripping bolt	
4040	1619 2766 00		2	Paint stripping bolt	
4045	9096 4568 00		2	Panel	
4050	1079 1472 05		4	Screw	
4055	9096 4234 10		3	End panel	
4071	0300 0274 94		8	Plain washer	

Ref.	Part number		Qty	Name	Remarks
5005	9096 4569 00		8	Door	
5010	9096 4569 11		1	Door	
5013	9096 4569 10		2	Door	
5015	1621 0607 00		26	Pin	
5020	1089 9068 01		1	Key	
5025	0160 6105 00		16	Screw	
5030	0298 1000 25		3	Nut	
5035	0147 1334 00		2	Hex.bolt	
5040	0261 1107 00		4	Nut	
5045	0160 6105 00		2	Screw	
6005	1619 2795 00		AR	Rubber strip	
				ZR275 7.5 bar(e) 320KW/ 3.3KV O	
				ZR275 7.5 bar(e) 320KW/ 6.6KV O	
				ZR275 7.5 bar(e) 345KW/ 3.3KV O	
				ZR275 7.5 bar(e) 345KW/ 6.6KV O	
				Bodywork complete	
1010	9096 4800 30		1	Frame	
				Kit canopy	
2005	1621 2477 00		2	Stay	
2025	1621 2478 00		2	Stay	
2055	9096 4579 00		8	Stay	
2075	9096 4232 10		4	Beam	
2080	9096 4232 50		2	Beam	
2095	1621 2632 00		2	Plate	
2105	9096 4233 10		2	End panel	
2110	9096 4235 10		1	End panel	
2120	**9096 4236 10**		**1**	**End panel**	
	0581 0000 86	•	2	Pipe coupling	
	1621 9438 00	•	6	Pin	
	1615 7884 00	•	6	Clip	
2130	9095 4567 50		1	Roof	
2135	9096 4582 00		1	Roof	
2140	1619 2766 02		4	Paint stripping bolt	
2142	1619 2766 02		4	Paint stripping bolt	
2145	1621 5747 00		4	Profile	
2150	1621 5748 00		4	Profile	
2155	1621 2544 00		8	Profile	
2160	0300 0274 32		24	Plain washer	
2165	0211 1247 03		24	Hex sock. screw	
3050	1619 2766 00		6	Paint stripping bolt	
4010	1621 2538 00		24	Hinge	
4020	1619 2766 00		1	Paint stripping bolt	
4040	1619 2766 00		2	Paint stripping bolt	
4045	9096 4568 00		2	Panel	
4050	1079 1472 05		4	Screw	
4055	9096 4234 10		3	End panel	
4071	0300 0274 94		8	Plain washer	
5005	9096 4569 00		8	Door	
5010	9096 4569 11		1	Door	
5013	9096 4569 10		2	Door	
5015	1621 0607 00		26	Pin	
5020	1089 9068 01		1	Key	
5025	0160 6105 00		4	Screw	
5030	0160 6105 00		16	Screw	
5035	0298 1000 25		3	Nut	
5040	0147 1334 00		2	Hex.bolt	
5045	0261 1107 00		4	Nut	
6005	1619 2795 00		AR	Rubber strip	

31

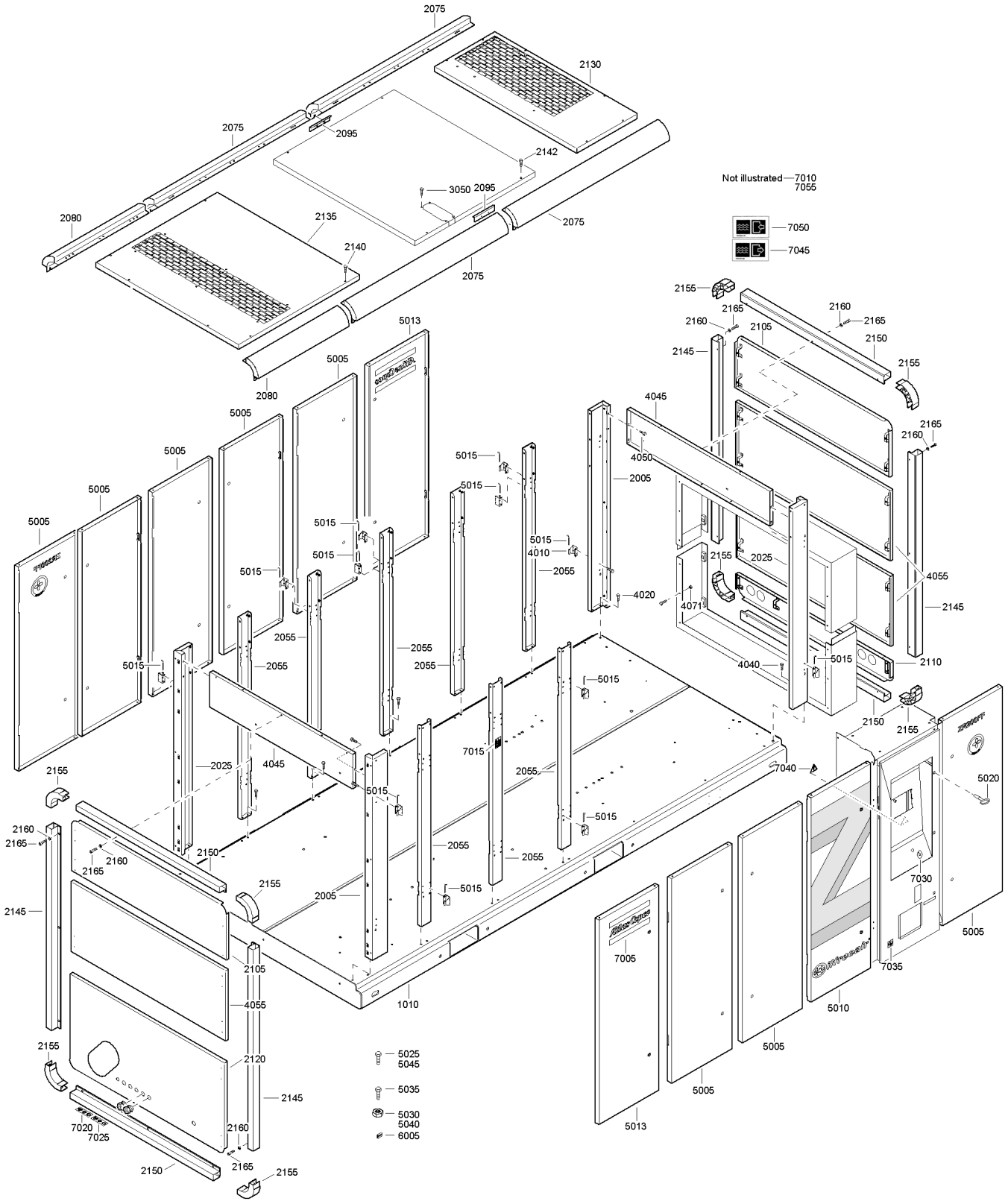
Not illustrated 7010
7055
7050
7045
2075
2130
2095
2142
3050
2080
2135
2140
2155
2160
2165
2105
2150
2145
4045
4050
2005
5013
5005
5015
4010
2055
4020
4071
2025
4055
2110
4040
7015
7040
5020
7030
7005
7035
5010
1010
2120
5025
5045
5035
5030
5040
6005
7020
7025

Bodywork ZR - Doors and Stays

Ref.	Part number	Qty	Name	Remarks
			Kit-decal	
7005	0690 1140 01	2	House mark	
7010	1079 3301 29	5	Lable	
7015	1079 9923 88	6	Lable	
7020	1079 9922 35	1	Decal	
7025	1079 9922 36	1	Decal	
7030	1621 0478 00	1	Lable	
7035	1079 9923 72	2	Lable	
7040	1088 1001 04	2	Warning mark	
7045	1079 9913 79	1	Inform. Lable	
7050	1079 9913 69	2	Inform. Lable	
7055	1079 9901 67	1	Lable	

32

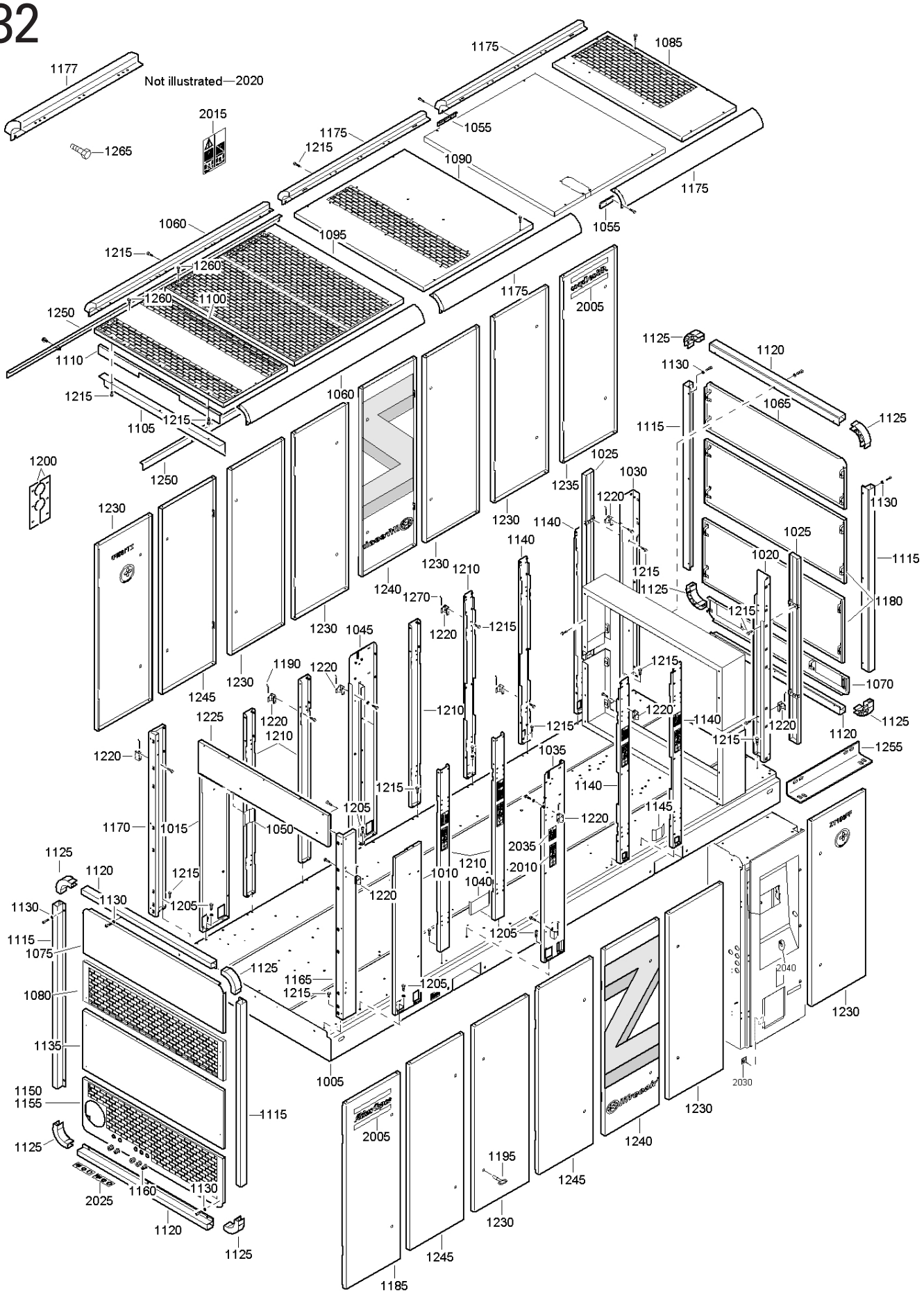
1177
Not illustrated—2020
2015
1265
1175
1085
1055
1215
1090
1060
1095
1260
1100
1250
1110
1105
1200
1230
1240
1245
1005
1010
1015
1020
1025
1030
1035
1040
1045
1050
1055
1060
1065
1070
1075
1080
1085
1090
1095
1100
1105
1110
1115
1120
1125
1130
1135
1140
1145
1150
1155
1160
1165
1170
1175
1180
1185
1190
1195
1200
1205
1210
1215
1220
1225
1230
1235
1240
1245
1250
1255
1260
1265
1270
2005
2010
2015
2020
2025
2030
2035
2040

Bodywork ZT - Doors and Stays

Ref.	Part number	Qty	Name	Remarks
			ZT160 7.5 bar(e)	
			160KW,3.3KV S	
			ZT160 8.6 bar(e)	
			160KW,3.3KV S	
			ZT160 10 bar(e)	
			160KW,3.3KV S	
			ZT200 7.5 bar(e)	
			200KW,3.3KV S	
			ZT200 8.6 bar(e)	
			200KW,3.3KV S	
			ZT 200 10 bar(e)	
			200KW,3.3KV S	
			ZT250 7.5 bar(e)	
			250KW,3.3KV S	
			ZT250 8.6 bar(e)	
			250KW,3.3KV S	
			ZT250 10 bar(e)	
			250KW,3.3KV S	
1005	9096 4351 10	1	Frame	
1010	9096 4753 00	1	Stay	
1015	9096 4752 00	1	Stay	
1020	9096 4751 00	1	Stay	
1025	1621 2864 00	2	Stay	
1030	9096 4754 00	1	Stay	
1035	1621 2865 00	1	Support	
1040	1621 4246 00	1	Plate	
1045	1621 2866 00	1	Stay	
1050	1621 4250 00	1	Plate	
1055	1621 2632 00	2	Plate	
1060	9096 4242 00	2	Beam	
1065	9096 4243 10	1	End Panel	
1070	9096 4235 10	1	End Panel	
1075	9096 4233 10	1	End Panel	
1080	9096 4244 00	1	End Panel	
1085	9096 4567 50	1	Roof	
1090	9096 4582 00	1	Roof	
1095	9096 4606 00	1	Roof	
1100	9096 4750 00	1	Roof	
1105	1621 2853 00	1	Baffle	
1110	1621 2852 00	1	Baffle	
1115	1621 5747 00	4	Profile	
1120	1621 5748 00	4	Profile	
1125	1621 2544 00	8	Profile	
1130	0300 0274 32	24	Plain washer	
1135	9096 4245 10	1	End Panel	
1140	9096 4628 00	4	Stay	
1145	1621 2701 00	4	Plate	
1150	9096 4246 10	1	End Panel	
1155	1621 2550 00	12	Pin	
1160	0581 0000 86	5	Pipe coupling	
1165	1621 2477 00	1	Stay	
1170	1621 2478 00	1	Stay	
1175	9096 4232 10	4	Beam	
1177	9096 4232 50	2	Beam	
1180	9096 4234 10	2	End Panel	
1185	9096 4569 14	1	Door	
1190	1621 0607 00	36	Pin	
1195	1089 9068 01	1	Key	
1200	1202 6584 00	AR	Seal	
1205	0147 1400 03	12	Hex. head screw	
1210	9096 4579 00	6	Stay	
1215	1619 2766 00	70	Paint stripping bolt	
1220	1621 2538 00	34	Hinge	
1225	9096 4568 00	1	Panel	
1230	9096 4569 00	10	Door	
1235	9096 4569 10	1	Door	
1240	9096 4569 11	2	Door	
1245	9096 4569 13	3	Door	
1250	1621 2854 00	2	Bracket	
1255	1621 3333 00	1	Tran.Bracket	
1260	0211 1247 03	24	Hex socket Screw	
1265	0147 1320 03	2	Hex.bolt	
1270	1621 9438 01	12	Pin	
			ZT250 7.5 bar(e)	
			250KW,6.6KV S	
			ZT250 8.6 bar(e)	
			250KW,6.6KV S	
			ZT250 10 bar(e)	
			250KW,6.6KV S	
			ZT 275 7.5 bar(e)	
			275KW,6.6KV S	
			ZT275 8.6 bar(e)	
			275KW,3.3KV S	
			ZT275 8.6 bar(e)	
			275KW,6.6KV S	
			ZT275 10 bar(e)	
			275KW,3.3KV S	
			ZT275 10 bar(e)	
			275KW,6.6KV S	
1005	9096 4351 10	1	Frame	
1010	9096 4753 00	1	Stay	
1015	9096 4752 00	1	Stay	
1020	9096 4751 00	1	Stay	
1025	1621 2864 00	2	Stay	
1030	9096 4754 00	1	Stay	
1035	1621 2865 00	1	Support	
1040	1621 4246 00	1	Plate	
1045	1621 2866 00	1	Stay	
1050	1621 4250 00	1	Plate	
1055	1621 2632 00	2	Plate	
1060	9096 4242 00	2	Beam	
1065	9096 4243 10	1	End Panel	
1070	9096 4235 10	1	End Panel	
1075	9096 4233 10	1	End Panel	
1080	9096 4244 00	1	End Panel	
1085	9096 4567 50	1	Roof	
1090	9096 4582 00	1	Roof	
1095	9096 4606 00	1	Roof	
1100	9096 4750 00	1	Roof	
1105	1621 2853 00	1	Baffle	
1110	1621 2852 00	1	Baffle	
1115	1621 5747 00	4	Profile	
1120	1621 5748 00	4	Profile	
1125	1621 2544 00	8	Profile	
1130	0300 0274 32	24	Plain washer	
1135	9096 4245 10	1	End Panel	
1140	9096 4628 00	4	Stay	
1145	1621 2701 00	4	Plate	
1150	9096 4246 10	1	End Panel	
1155	1621 2550 00	12	Pin	
1160	0581 0000 86	5	Pipe coupling	
1165	1621 2477 00	1	Stay	
1170	1621 2478 00	1	Stay	
1175	9096 4232 10	4	Beam	
1177	9096 4232 50	2	Beam	
1180	9096 4234 10	2	End Panel	
1185	9096 4569 14	1	Door	
1190	1621 0607 00	36	Pin	

32

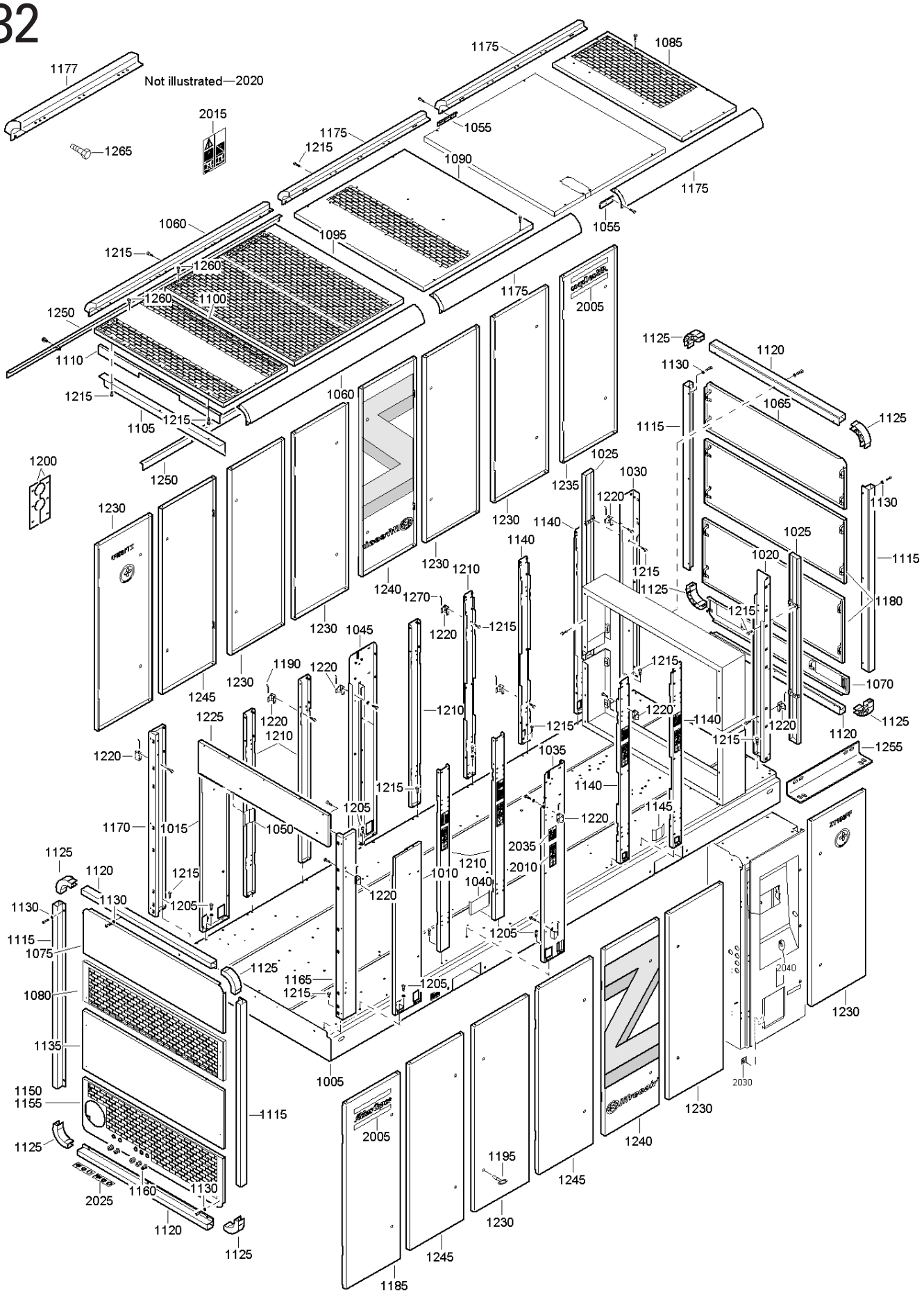
1177
Not illustrated—2020
2015
1265
1175
1085
1055
1215
1090
1060
1095
1260
1100
1250
1110
1105
2005
1125
1120
1130
1065
1115
1025
1030
1235
1220
1140
1020
1180
1070
1255
1230
1240
1210
1270
1045
1190
1245
1225
1035
1170
1015
1050
1205
1010
1040
2035
2010
1145
1075
1080
1165
1135
1150
1155
1005
1195
1185
2025
1160
2040
2030

Bodywork ZT - Doors and Stays

Ref.	Part number	Qty	Name	Remarks
1195	1089 9068 01	1	Key	
1200	1202 6584 00	AR	Seal	
1205	0147 1400 03	12	Hex. head screw	
1210	9096 4579 00	6	Stay	
1215	1619 2766 00	70	Paint stripping bolt	
1220	1621 2538 00	34	Hinge	
1225	9096 4568 00	1	Panel	
1230	9096 4569 00	10	Door	
1235	9096 4569 10	1	Door	
1240	9096 4569 11	2	Door	
1245	9096 4569 13	3	Door	
1250	1621 2854 00	2	Bracket	
1255	1621 3333 00	1	Tran.Bracket	
1260	0211 1247 03	24	Hex socket Screw	
1265	0147 1320 03	2	Hex.bolt	
1270	1621 9438 01	12	Pin	
			ZT275 7.5 bar(e)	
			275KW,3.3KV S	
1005	9096 4351 10	1	Frame	
1010	9096 4753 00	1	Stay	
1015	9096 4752 00	1	Stay	
1020	9096 4751 00	1	Stay	
1025	1621 2864 00	2	Stay	
1030	9096 4754 00	1	Stay	
1035	1621 2865 00	1	Support	
1040	1621 4246 00	1	Plate	
1045	1621 2866 00	1	Stay	
1050	1621 4250 00	1	Plate	
1055	1621 2632 00	2	Plate	
1060	9096 4242 00	2	Beam	
1065	9096 4243 10	1	End Panel	
1070	9096 4235 10	1	End Panel	
1075	9096 4233 10	1	End Panel	
1080	9096 4244 00	1	End Panel	
1085	9096 4567 50	1	Roof	
1090	9096 4582 00	1	Roof	
1095	9096 4606 00	1	Roof	
1100	9096 4750 00	1	Roof	
1105	1621 2853 00	1	Baffle	
1110	1621 2852 00	1	Baffle	
1115	1621 5747 00	4	Profile	
1120	1621 5748 00	4	Profile	
1125	1621 2544 00	8	Profile	
1130	0300 0274 32	24	Plain washer	
1135	9096 4245 10	1	End Panel	
1140	9096 4628 00	4	Stay	
1145	1621 2701 00	4	Plate	
1150	9096 4246 10	1	End Panel	
1155	1621 2550 00	12	Pin	
1160	0581 0000 86	5	Pipe coupling	
1165	1621 2477 00	1	Stay	
1170	1621 2478 00	1	Stay	
1175	9096 4232 10	4	Beam	
1177	9096 4232 50	2	Beam	
1180	9096 4234 10	2	End Panel	
1185	9096 4569 14	1	Door	
1190	1621 0607 00	36	Pin	
1195	1089 9068 01	1	Key	
1200	1202 6584 00	AR	Seal	
1205	0147 1400 03	12	Hex. head screw	
1210	9096 4579 00	6	Stay	
1215	1619 2766 00	70	Paint stripping bolt	
1220	1621 2538 00	34	Hinge	
1225	9096 4568 00	1	Panel	

Ref.	Part number	Qty	Name	Remarks
1230	9096 4569 00	10	Door	
1235	9096 4569 10	1	Door	
1240	9096 4569 11	2	Door	
1245	9096 4569 13	3	Door	
1250	1621 2854 00	2	Bracket	
1255	1621 3333 00	1	Tran.Bracket	
1260	0211 1247 03	24	Hex socket Screw	
1265	0147 1320 03	2	Hex.bolt	
1270	1621 9438 01	12	Pin	
			ZT160 7.5 bar(e)	
			160KW,6.6KV S	
			ZT160 8.6 bar(e)	
			160KW,6.6KV S	
			ZT160 10 bar(e)	
			160KW,6.6KV S	
			ZT200 7.5 bar(e)	
			200KW,6.6KV S	
			ZT200 8.6 bar(e)	
			200KW,6.6KV S	
			ZT200 10 bar(e)	
			200KW,6.6KV S	
1005	9096 4351 10	1	Frame	
1010	9096 4753 00	1	Stay	
1015	9096 4752 00	1	Stay	
1020	9096 4751 00	1	Stay	
1025	1621 2864 00	2	Stay	
1030	9096 4754 00	1	Stay	
1035	1621 2865 00	1	Support	
1040	1621 4246 00	1	Plate	
1045	1621 2866 00	1	Stay	
1050	1621 4250 00	1	Plate	
1055	1621 2632 00	2	Plate	
1060	9096 4242 00	2	Beam	
1065	9096 4243 10	1	End Panel	
1070	9096 4235 10	1	End Panel	
1075	9096 4233 10	1	End Panel	
1080	9096 4244 00	1	End Panel	
1085	9096 4567 50	1	Roof	
1090	9096 4582 00	1	Roof	
1095	9096 4606 00	1	Roof	
1100	9096 4750 00	1	Roof	
1105	1621 2853 00	1	Baffle	
1110	1621 2852 00	1	Baffle	
1115	1621 5747 00	4	Profile	
1120	1621 5748 00	4	Profile	
1125	1621 2544 00	8	Profile	
1130	0300 0274 32	24	Plain washer	
1135	9096 4245 10	1	End Panel	
1140	9096 4628 00	4	Stay	
1145	1621 2701 00	4	Plate	
1150	9096 4246 10	1	End Panel	
1155	1621 2550 00	12	Pin	
1160	0581 0000 86	5	Pipe coupling	
1165	1621 2477 00	1	Stay	
1170	1621 2478 00	1	Stay	
1175	9096 4232 10	4	Beam	
1177	9096 4232 50	2	Beam	
1180	9096 4234 10	2	End Panel	
1185	9096 4569 14	1	Door	
1190	1621 0607 00	36	Pin	
1195	1089 9068 01	1	Key	
1200	1202 6584 00	AR	Seal	
1205	0147 1400 03	12	Hex. head screw	
1210	9096 4579 00	6	Stay	

32

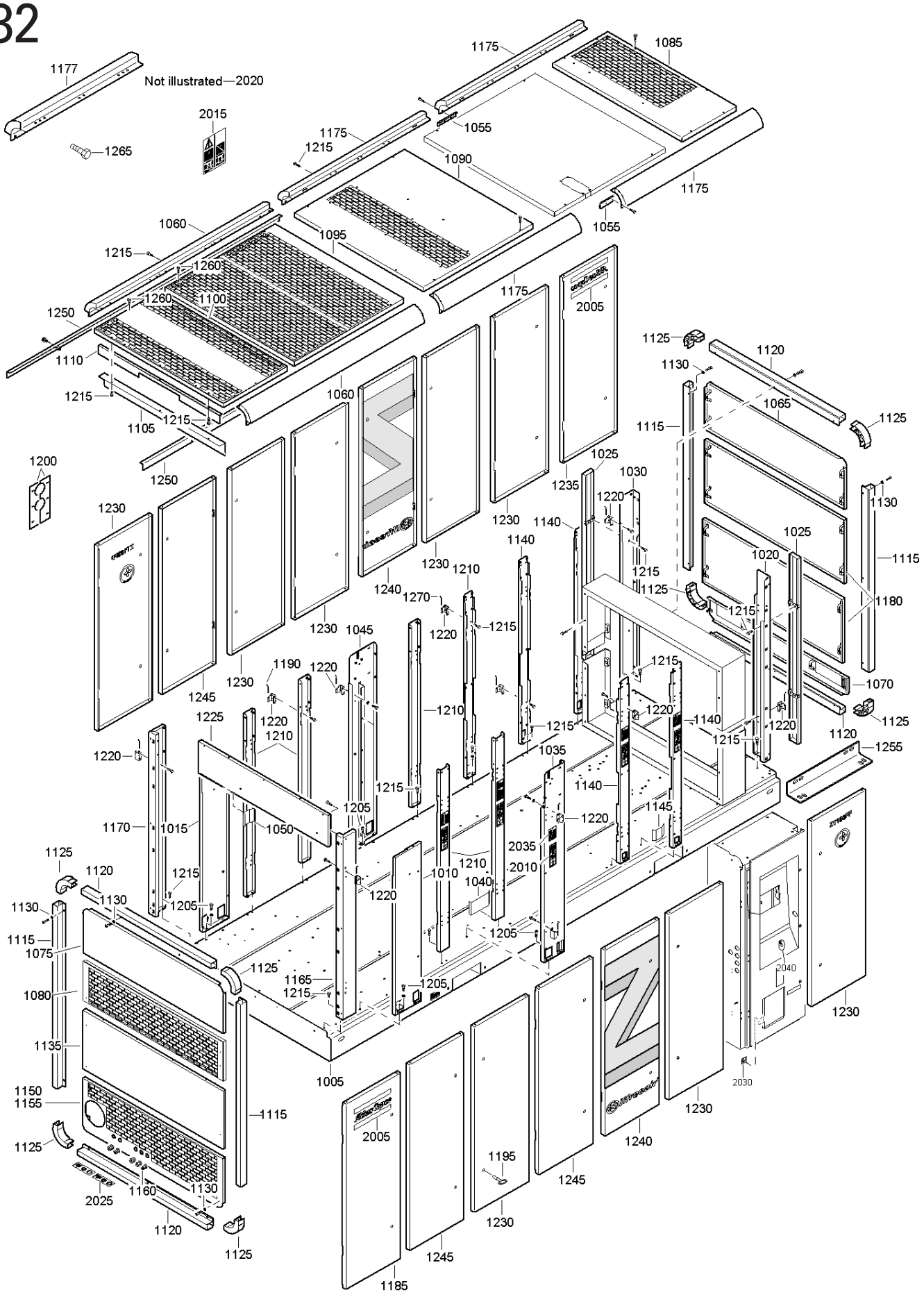
1177
Not illustrated—2020
2015
1265
1175
1085
1055
1215
1090
1060
1095
1260
1100
1250
1110
1105
2005
1125
1120
1130
1065
1115
1025
1030
1235
1220
1140
1020
1180
1070
1255
1200
1230
1240
1270
1210
1045
1190
1245
1225
1035
1170
1015
1050
1205
1010
1040
2035
2010
1145
1075
1080
1135
1165
1005
1150
1155
2025
1160
1185
1195
2040
2030

Bodywork ZT - Doors and Stays

Ref.	Part number	Qty	Name	Remarks
1215	1619 2766 00	70	Paint stripping bolt	
1220	1621 2538 00	34	Hinge	
1225	9096 4568 00	1	Panel	
1230	9096 4569 00	10	Door	
1235	9096 4569 10	1	Door	
1240	9096 4569 11	2	Door	
1245	9096 4569 13	3	Door	
1250	1621 2854 00	2	Bracket	
1255	1621 3333 00	1	Tran.Bracket	
1260	0211 1247 03	24	Hex socket Screw	
1265	0147 1320 03	2	Hex.bolt	
1270	1621 9438 01	12	Pin	
			Kit-decal	
2005	0690 1140 01	2	House mark	
2010	1079 9901 29	9	Lable	
2015	1079 9901 67	1	Lable	
2020	1079 9901 35	1	Decal	
2025	1079 9922 36	1	Decal	
2030	1079 9923 72	2	Lable	
2035	1079 9923 88	10	Lable	
2040	1621 0478 00	1	Lable	

33

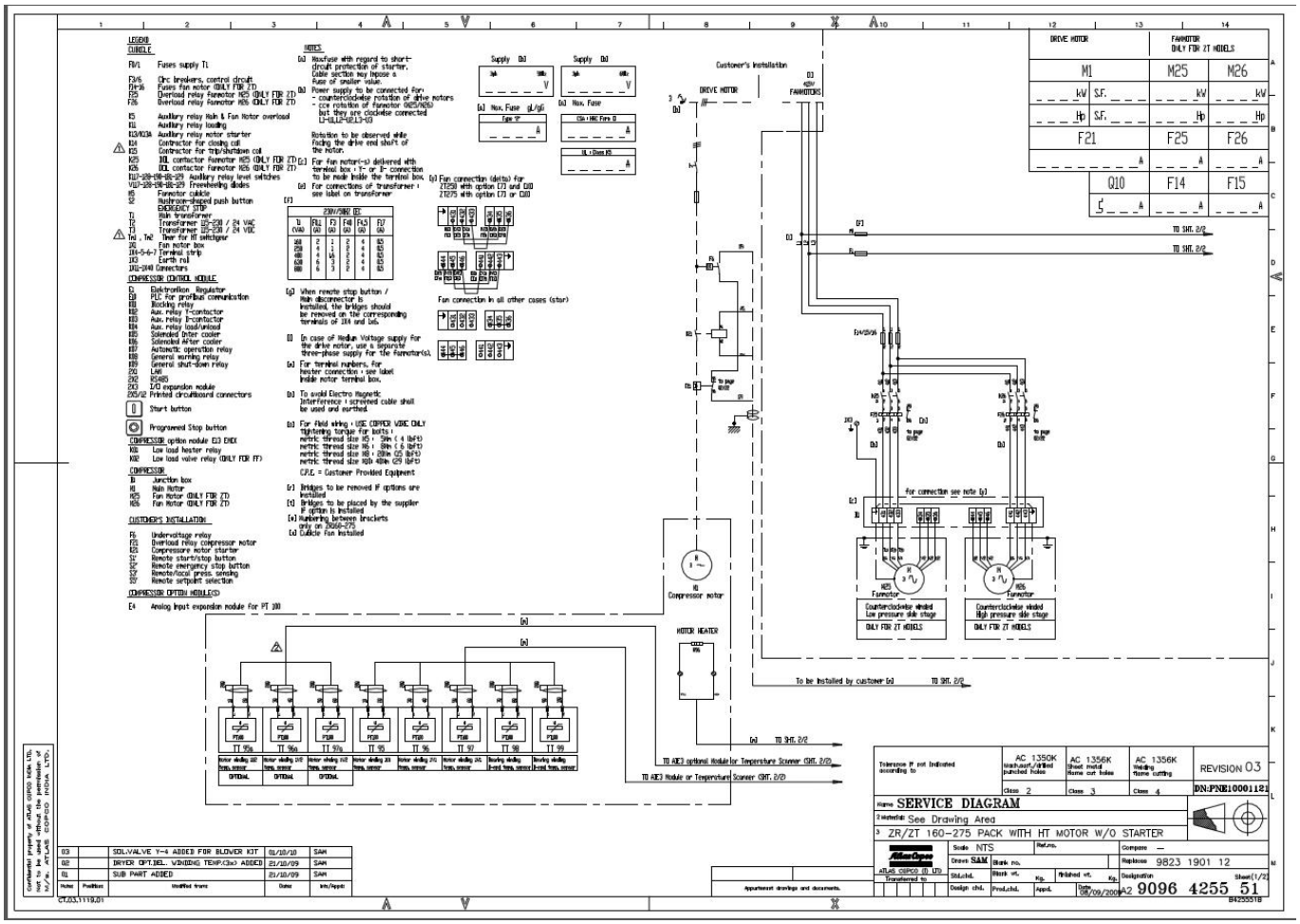
SERVICE DIAGRAM
ZR/ZT 160-275 PACK WITH HT MOTOR W/O STARTER
REVISION 03
9096 4255 51

Electrical kit starter

Ref.	Part number		Qty	Name	Remarks
				ZR160 7.5 bar(e) 190KW/ 3.3KV O	
				ZR160 7.5 bar(e) 190KW/ 6.6KV O	
				ZR160 7.5 bar(e) 200KW/ 3.3KV O	
				ZR160 7.5 bar(e) 200KW/ 6.6KV O	
				ZR160 8.6 bar(e) 175KW/ 3.3KV O	
				ZR160 8.6 bar(e) 175KW/ 6.6KV O	
				ZR160 8.6 bar(e) 190KW/ 3.3KV O	
				ZR160 8.6 bar(e) 190KW/ 6.6KV O	
				ZR160 10 bar(e) 165KW/ 3.3KV O	
				ZR160 10 bar(e) 165KW/ 6.6KV O	
				ZR160 10 bar(e) 175KW/ 3.3KV O	
				ZR160 10 bar(e) 175KW/ 6.6KV O	
				Zr160 modular pack complete	
	9096 4961 00		**1**	**C.panel w/o starter**	
	9096 4183 03	•	1	Ac contactor	
	9096 4183 04	•	1	Aux. Contactor	
	9096 4183 56	•	2	Ac contactor	
	9096 4183 56	•	2	Ac contactor	
	9096 4183 07	•	2	Aux relay	
	9096 4183 57	•	4	Addon block	
	9096 4183 10	•	1	Transformer	
	9096 4183 11	•	1	Transformer	
	9096 4183 12	•	1	Transformer	
	9096 4183 58	•	2	Timer pod	
	9096 4183 13	•	2	Mcb-1p,	
	9096 4183 15	•	3	Mcb-1p,	
	9096 4183 18	•	1	Emergency stop	
	9096 4183 19	•	3	Nc element	
	9096 4183 20	•	1	Wago connector set	
	9096 4183 21	•	1	Copper busbar with hardware	
	9096 4183 22	•	6	Epoxy busbar support	
	9096 4183 23	•	34	Terminal	
	9096 4183 24	•	4	Earthing terminal	
	9096 4183 25	•	3	End clamp	
	9096 4183 26	•	11	End plate dd	
	9096 4183 27	•	171	Control cable	
	9096 4183 28	•	14.5	Control cable	
	9096 4183 29	•	6	Control cable	
	9096 4183 30	•	18.5	Control cable	
	9096 4183 31	•	3	Control cable	
	9096 4183 32	•	7.5	Power cable	
	9096 4183 33	•	6.5	Power cable	
	9096 4183 34	•	4.5	Power cable	
	9096 4183 35	•	4	Power cable	
	9096 4183 36	•	6	Earth cable	
	9096 4183 37	•	1	Acrylic shourding set	
	1621 2232 00	•	1	Base plate for panel	
	9096 4183 39	•	1	Consumable set	
	9096 4183 40	•	2	Earth bolt	
	9096 4183 41	•	2	Din rail channel	
	9096 4183 42	•	4	Pvc channel	
	9096 4183 43	•	1	Pvc channel	
	9096 4183 44	•	1	Label set	
1010	9096 4255 51	•	1	Service diagram	
	9096 4183 46	•	1	Fan for cubical	
	9096 4183 47	•	1	Filter	
	9096 4183 48	•	1	Din rail channel	
	9096 4183 23	•	10	Terminal	
	9096 4183 25	•	6	End clamp	
	9096 4183 26	•	5	End plate	
	1621 4226 00		2	Label	
	9096 4423 00		1	Temp.scanner	
				ZR200 7.5 bar(e) 240KW/ 3.3KV O	
				ZR200 7.5 bar(e) 240KW/ 6.6KV O	
				ZR200 7.5 bar(e) 255KW/ 3.3KV O	
				ZR200 7.5 bar(e) 255KW/ 6.6KV O	
				ZR200 8.6 bar(e) 220KW/ 3.3KV O	
				ZR200 8.6 bar(e) 220KW/ 6.6KV O	
				ZR200 8.6 bar(e) 240KW/ 3.3KV O	
				ZR200 8.6 bar(e) 240KW/ 6.6KV O	
				ZR200 10 bar(e) 200KW/ 3.3KV O	
				ZR200 10 bar(e) 200KW/ 6.6KV O	
				ZR200 10 bar(e) 220KW/ 3.3KV O	
				ZR200 10 bar(e) 220KW/ 6.6KV O	
				Zr200 modular pack complete	
	9096 4961 00		**1**	**C.panel w/o starter**	
	9096 4183 03	•	1	Ac contactor	
	9096 4183 04	•	1	Aux. Contactor	
	9096 4183 56	•	2	Ac contactor	
	9096 4183 56	•	2	Ac contactor	
	9096 4183 07	•	2	Aux relay	
	9096 4183 57	•	4	Addon block	
	9096 4183 10	•	1	Transformer	
	9096 4183 11	•	1	Transformer	
	9096 4183 12	•	1	Transformer	
	9096 4183 58	•	2	Timer pod	
	9096 4183 13	•	2	Mcb-1p,	
	9096 4183 15	•	3	Mcb-1p,	
	9096 4183 18	•	1	Emergency stop	
	9096 4183 19	•	3	Nc element	
	9096 4183 20	•	1	Wago connector set	
	9096 4183 21	•	1	Copper busbar with hardware	
	9096 4183 22	•	6	Epoxy busbar support	
	9096 4183 23	•	34	Terminal	
	9096 4183 24	•	4	Earthing terminal	
	9096 4183 25	•	3	End clamp	
	9096 4183 26	•	11	End plate dd	
	9096 4183 27	•	171	Control cable	
	9096 4183 28	•	14.5	Control cable	
	9096 4183 29	•	6	Control cable	
	9096 4183 30	•	18.5	Control cable	
	9096 4183 31	•	3	Control cable	

33

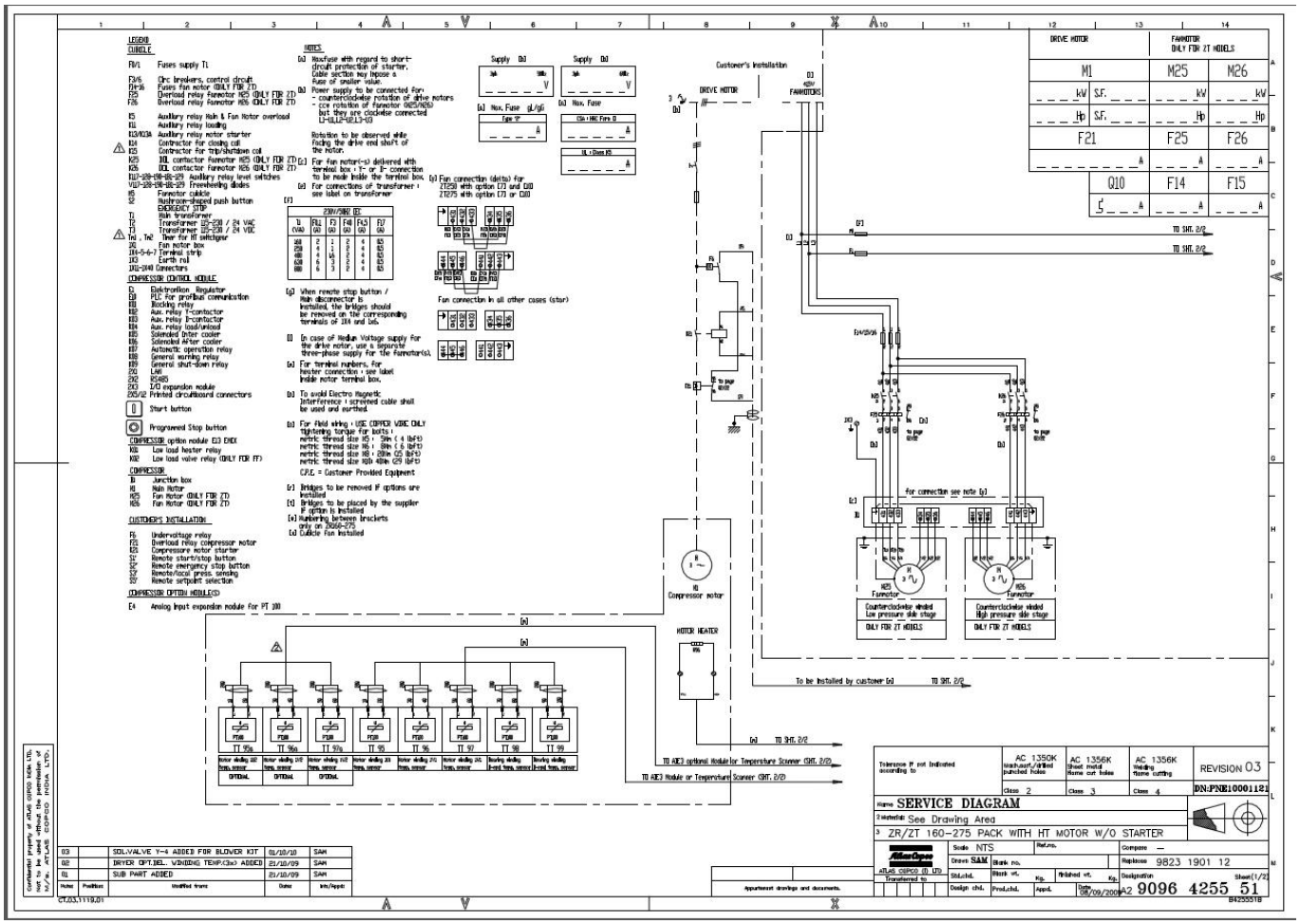
SERVICE DIAGRAM
See Drawing Area
ZR/ZT 160-275 PACK WITH HT MOTOR W/O STARTER
REVISION 03
9823 1901 12
9096 4255 51

Electrical kit starter

Ref.	Part number		Qty	Name	Remarks
	9096 4183 32	•	7.5	Power cable	
	9096 4183 33	•	6.5	Power cable	
	9096 4183 34	•	4.5	Power cable	
	9096 4183 35	•	4	Power cable	
	9096 4183 36	•	6	Earth cable	
	9096 4183 37	•	1	Acrylic shourding set	
	1621 2232 00	•	1	Base plate for panel	
	9096 4183 39	•	1	Consumable set	
	9096 4183 40	•	2	Earth bolt	
	9096 4183 41	•	2	Din rail channel	
	9096 4183 42	•	4	Pvc channel	
	9096 4183 43	•	1	Pvc channel	
	9096 4183 44	•	1	Label set	
1010	9096 4255 51	•	1	Service diagram	
	9096 4183 46	•	1	Fan for cubical	
	9096 4183 47	•	1	Filter	
	9096 4183 48	•	1	Din rail channel	
	9096 4183 23	•	10	Terminal	
	9096 4183 25	•	6	End clamp	
	9096 4183 26	•	5	End plate	
	1621 4226 01		2	Label	
	9096 4423 00		1	Temp.scanner	
				ZR250 7.5 bar(e) 300KW/ 3.3KV O	
				ZR250 7.5 bar(e) 300KW/ 6.6KV O	
				ZR250 7.5 bar(e) 320KW/ 3.3KV O	
				ZR250 7.5 bar(e) 320KW/ 6.6KV O	
				ZR250 8.6 bar(e) 280KW/ 3.3KV O	
				ZR250 8.6 bar(e) 280KW/ 6.6KV O	
				ZR250 8.6 bar(e) 300KW/ 3.3KV O	
				ZR250 8.6 bar(e) 300KW/ 6.6KV O	
				ZR250 10 bar(e) 255KW/ 3.3KV O	
				ZR250 10 bar(e) 255KW/ 6.6KV O	
				ZR250 10 bar(e) 280KW/ 3.3KV O	
				ZR250 10 bar(e) 280KW/ 6.6KV O	
				Zr250 modular pack complete	
	9096 4961 00		**1**	**C.panel w/o starter**	
	9096 4183 03	•	1	Ac contactor	
	9096 4183 04	•	1	Aux. Contactor	
	9096 4183 56	•	2	Ac contactor	
	9096 4183 56	•	2	Ac contactor	
	9096 4183 07	•	2	Aux relay	
	9096 4183 57	•	4	Addon block	
	9096 4183 10	•	1	Transformer	
	9096 4183 11	•	1	Transformer	
	9096 4183 12	•	1	Transformer	
	9096 4183 58	•	2	Timer pod	
	9096 4183 13	•	2	Mcb-1p,	
	9096 4183 15	•	3	Mcb-1p,	
	9096 4183 18	•	1	Emergency stop	
	9096 4183 19	•	3	Nc element	
	9096 4183 20	•	1	Wago connector set	
	9096 4183 21	•	1	Copper busbar with hardware	
	9096 4183 22	•	6	Epoxy busbar support	
	9096 4183 23	•	34	Terminal	
	9096 4183 24	•	4	Earthing terminal	
	9096 4183 25	•	3	End clamp	
	9096 4183 26	•	11	End plate dd	
	9096 4183 27	•	171	Control cable	
	9096 4183 28	•	14.5	Control cable	
	9096 4183 29	•	6	Control cable	
	9096 4183 30	•	18.5	Control cable	
	9096 4183 31	•	3	Control cable	
	9096 4183 32	•	7.5	Power cable	
	9096 4183 33	•	6.5	Power cable	
	9096 4183 34	•	4.5	Power cable	
	9096 4183 35	•	4	Power cable	
	9096 4183 36	•	6	Earth cable	
	9096 4183 37	•	1	Acrylic shourding set	
	1621 2232 00	•	1	Base plate for panel	
	9096 4183 39	•	1	Consumable set	
	9096 4183 40	•	2	Earth bolt	
	9096 4183 41	•	2	Din rail channel	
	9096 4183 42	•	4	Pvc channel	
	9096 4183 43	•	1	Pvc channel	
	9096 4183 44	•	1	Label set	
1010	9096 4255 51	•	1	Service diagram	
	9096 4183 46	•	1	Fan for cubical	
	9096 4183 47	•	1	Filter	
	9096 4183 48	•	1	Din rail channel	
	9096 4183 23	•	10	Terminal	
	9096 4183 25	•	6	End clamp	
	9096 4183 26	•	5	End plate dd	
	1621 4226 02		2	Label	
	9096 4423 00		1	Temp.scanner	
				ZR275 7.5 bar(e) 320KW/ 3.3KV O	
				ZR275 7.5 bar(e) 320KW/ 6.6KV O	
				ZR275 7.5 bar(e) 345KW/ 3.3KV O	
				ZR275 7.5 bar(e) 345KW/ 6.6KV O	
				Zr275 modular pack complete	
	9096 4961 00		**1**	**C.panel w/o starter**	
	9096 4183 03	•	1	Ac contactor	
	9096 4183 04	•	1	Aux. Contactor	
	9096 4183 56	•	2	Ac contactor	
	9096 4183 56	•	2	Ac contactor	
	9096 4183 07	•	2	Aux relay	
	9096 4183 57	•	4	Addon block	
	9096 4183 10	•	1	Transformer	
	9096 4183 11	•	1	Transformer	
	9096 4183 12	•	1	Transformer	
	9096 4183 58	•	2	Timer pod	
	9096 4183 13	•	2	Mcb-1p,	
	9096 4183 15	•	3	Mcb-1p,	
	9096 4183 18	•	1	Emergency stop	
	9096 4183 19	•	3	Nc element	
	9096 4183 20	•	1	Wago connector set	
	9096 4183 21	•	1	Copper busbar with hardware	
	9096 4183 22	•	6	Epoxy busbar support	
	9096 4183 23	•	34	Terminal	
	9096 4183 24	•	4	Earthing terminal	
	9096 4183 25	•	3	End clamp	

33

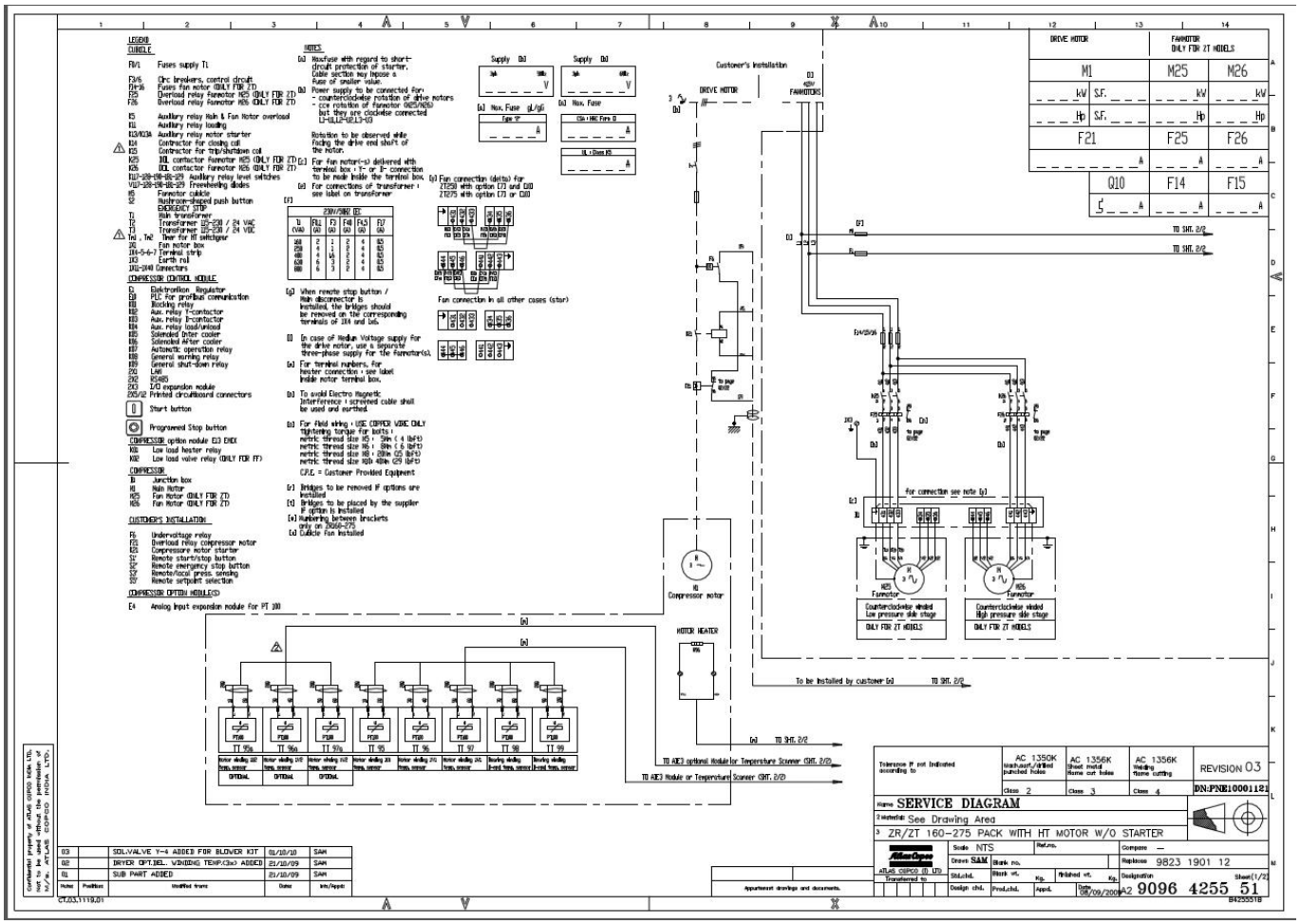
SERVICE DIAGRAM
See Drawing Area
ZR/ZT 160-275 PACK WITH HT MOTOR W/O STARTER
REVISION 03
9823 1901 12
9096 4255 51

Electrical kit starter

Ref.	Part number		Qty	Name	Remarks
	9096 4183 26	•	11	End plate dd	
	9096 4183 27	•	171	Control cable	
	9096 4183 28	•	14.5	Control cable	
	9096 4183 29	•	6	Control cable	
	9096 4183 30	•	18.5	Control cable	
	9096 4183 31	•	3	Control cable	
	9096 4183 32	•	7.5	Power cable	
	9096 4183 33	•	6.5	Power cable	
	9096 4183 34	•	4.5	Power cable	
	9096 4183 35	•	4	Power cable	
	9096 4183 36	•	6	Earth cable	
	9096 4183 37	•	1	Acrylic shourding set	
	1621 2232 00	•	1	Base plate for panel	
	9096 4183 39	•	1	Consumable set	
	9096 4183 40	•	2	Earth bolt	
	9096 4183 41	•	2	Din rail channel	
	9096 4183 42	•	4	Pvc channel	
	9096 4183 43	•	1	Pvc channel	
	9096 4183 44	•	1	Label set	
1010	9096 4255 51	•	1	Service diagram	
	9096 4183 46	•	1	Fan for cubical	
	9096 4183 47	•	1	Filter	
	9096 4183 48	•	1	Din rail channel	
	9096 4183 23	•	10	Terminal	
	9096 4183 25	•	6	End clamp	
	9096 4183 26	•	5	End plate dd	
	1621 4226 03		2	Lable zr275	
	9096 4423 00		1	Temp.scanner ZT160 7.5 bar(e) 160KW,3.3KV S ZT160 7.5 bar(e) 160KW,6.6KV S ZT160 8.6 bar(e) 160KW,3.3KV S ZT160 10 bar(e) 160KW,3.3KV S ZT160 8.6 bar(e) 160KW,6.6KV S ZT160 10 bar(e) 160KW,6.6KV S	
	9096 4962 00		**1**	**Kit starter w/0 starter Zt160 modular pack complete**	
	9096 4183 03	•	1	Ac contactor	
	9096 4183 04	•	1	Aux. Contactor	
	9096 4183 56	•	2	Relay	
	9096 4183 56	•	2	Ac contactor-	
	9096 4183 07	•	2	Aux relay	
	9096 4183 57	•	4	Addon block	
	9096 4183 58	•	2	Timer pod	
	9096 4183 03	•	2	Ac contactor	
	9096 4183 07	•	2	Aux relay	
	9096 4184 03	•	2	Biametal overload relay	
	9096 4183 10	•	1	Transformer	
	9096 4183 11	•	1	Transformer	
	9096 4183 12	•	1	Transformer	
	9096 4183 13	•	2	Mcb-1p	
	9096 4183 15	•	3	Mcb-1p	
	9096 4183 16	•	3	Hrc fuse base	
	9096 4183 17	•	3	Hrc fuse base	
	9096 4183 18	•	1	Emergency stop pb	
	9096 4183 19	•	3	Nc element	
	9096 4183 20	•	1	Wago connector set	
	9096 4183 21	•	1	Copper busbar with hardware	

Ref.	Part number		Qty	Name	Remarks
	9096 4183 22	•	6	Epoxy busbar support	
	9096 4183 23	•	44	Terminal	
	9096 4183 49	•	3	Power terminal	
	9096 4183 50	•	3	Power terminal	
	9096 4183 51	•	2	Power terminal	
	9096 4183 24	•	4	Earthing terminal	
	9096 4183 25	•	3	End clamp	
	9096 4183 26	•	11	End plate dd	
	9096 4183 27	•	180	Control cable	
	9096 4183 28	•	14.5	Control cable	
	9096 4183 29	•	6	Control cable	
	9096 4183 30	•	21	Control cable	
	9096 4183 31	•	3	Control cable	
	9096 4183 32	•	12.5	Power cable	
	9096 4183 33	•	11.5	Power cable	
	9096 4183 34	•	9.5	Power cable	
	9096 4183 35	•	2	Power cable	
	9096 4183 36	•	6	Earth cable	
	9096 4183 37	•	1	Acrylic shourding set	
	9096 5158 00	•	0	Base plate	
	9096 4183 39	•	1	Consumable	
	9096 4183 40	•	2	Earth bolt	
	9096 4183 41	•	2	Din rail channel	
	9096 4183 42	•	4	Pvc channel	
	9096 4183 43	•	1	Packing box	
	9096 4183 44	•	1	Label set	
1010	9096 4255 51	•	1	Service diagram	
	9096 4183 46	•	1	Fan for cubical	
	9096 4183 47	•	1	Filter	
	9096 4183 48	•	1	Din rail channel	
	9096 4183 25	•	6	End clamp	
	9096 4183 26	•	5	End plate dd	
	9096 5039 00	•	1	Earthing cable	
	9096 5095 00	•	1	Wire harness	
	1621 4226 12		2	Lable zt160	
	9096 4423 00		1	Temp.scanner w/cables-masubus	
	9096 4010 00		1	Kit-decal zt 160 275 pack ZT200 7.5 bar(e) 200KW,3.3KV S ZT200 7.5 bar(e) 200KW,6.6KV S ZT200 8.6 bar(e) 200KW,3.3KV S ZT200 8.6 bar(e) 200KW,6.6KV S ZT200 10 bar(e) 200KW,6.6KV S ZT 200 10 bar(e) 200KW,3.3KV S	
	9096 4962 00		**1**	**Kit starter w/0 starter Zt200 modular pack complete**	
	9096 4183 03	•	1	Ac contactor	
	9096 4183 04	•	1	Aux. Contactor	
	9096 4183 56	•	2	Relay	
	9096 4183 56	•	2	Ac contactor-	
	9096 4183 07	•	2	Aux relay	
	9096 4183 57	•	4	Addon block	
	9096 4183 58	•	2	Timer pod	
	9096 4183 03	•	2	Ac contactor	
	9096 4183 07	•	2	Aux relay	
	9096 4184 03	•	2	Biametal overload relay	
	9096 4183 10	•	1	Transformer	

33

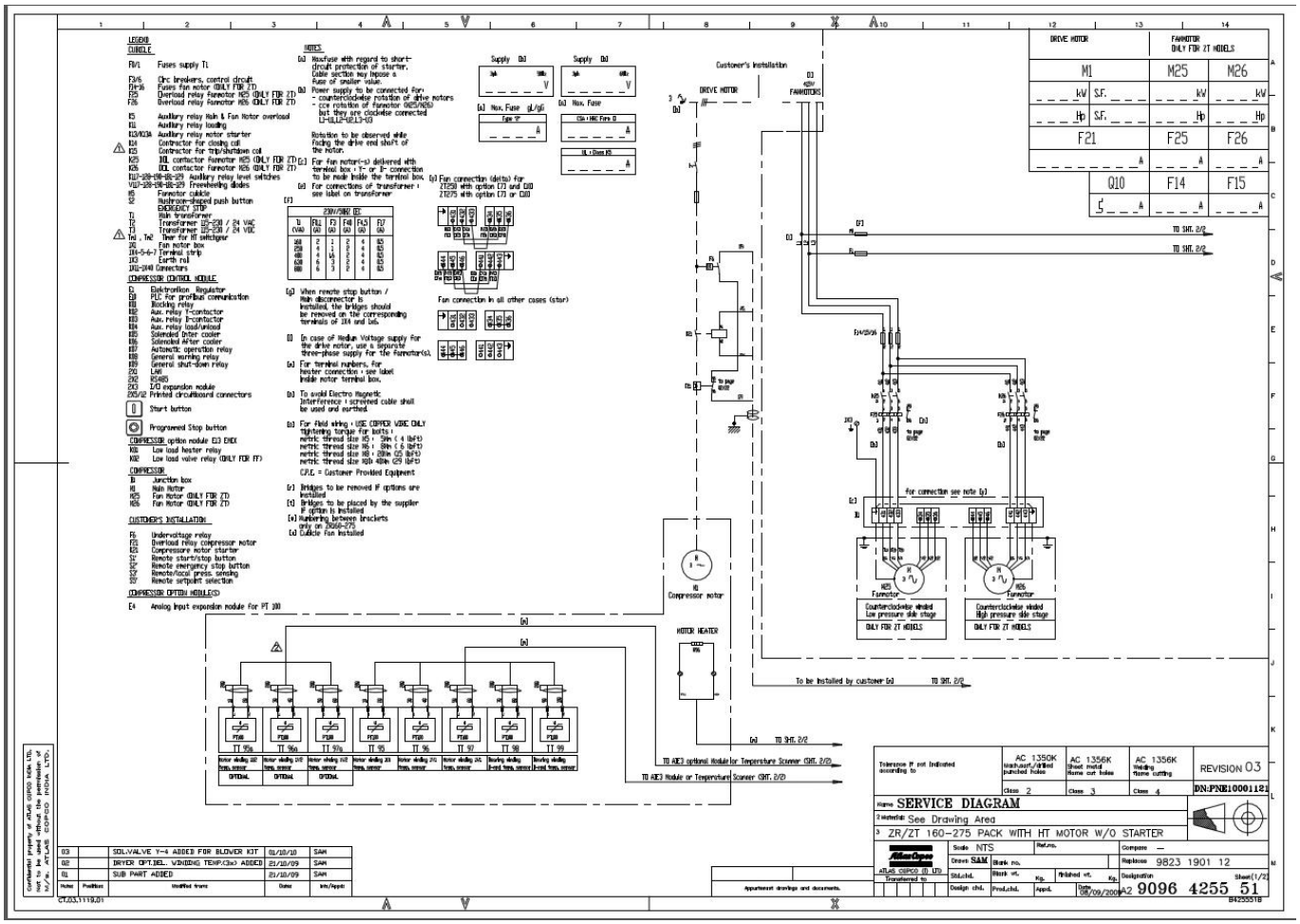
SERVICE DIAGRAM
ZR/ZT 160-275 PACK WITH HT MOTOR W/O STARTER
9096 4255 51

Electrical kit starter

Ref.	Part number		Qty	Name	Remarks
	9096 4183 11	•	1	Transformer	
	9096 4183 12	•	1	Transformer	
	9096 4183 13	•	2	Mcb-1p	
	9096 4183 15	•	3	Mcb-1p	
	9096 4183 16	•	3	Hrc fuse base	
	9096 4183 17	•	3	Hrc fuse base	
	9096 4183 18	•	1	Emergency stop pb	
	9096 4183 19	•	3	Nc element	
	9096 4183 20	•	1	Wago connector set	
	9096 4183 21	•	1	Copper busbar with hardware	
	9096 4183 22	•	6	Epoxy busbar support	
	9096 4183 23	•	44	Terminal	
	9096 4183 49	•	3	Power terminal	
	9096 4183 50	•	3	Power terminal	
	9096 4183 51	•	2	Power terminal	
	9096 4183 24	•	4	Earthing terminal	
	9096 4183 25	•	3	End clamp	
	9096 4183 26	•	11	End plate dd	
	9096 4183 27	•	180	Control cable	
	9096 4183 28	•	14.5	Control cable	
	9096 4183 29	•	6	Control cable	
	9096 4183 30	•	21	Control cable	
	9096 4183 31	•	3	Control cable	
	9096 4183 32	•	12.5	Power cable	
	9096 4183 33	•	11.5	Power cable	
	9096 4183 34	•	9.5	Power cable	
	9096 4183 35	•	2	Power cable	
	9096 4183 36	•	6	Earth cable	
	9096 4183 37	•	1	Acrylic shourding set	
	9096 5158 00	•	0	Base plate	
	9096 4183 39	•	1	Consumable	
	9096 4183 40	•	2	Earth bolt	
	9096 4183 41	•	2	Din rail channel	
	9096 4183 42	•	4	Pvc channel	
	9096 4183 43	•	1	Packing box	
	9096 4183 44	•	1	Label set	
1010	9096 4255 51	•	1	Service diagram	
	9096 4183 46	•	1	Fan for cubical	
	9096 4183 47	•	1	Filter	
	9096 4183 48	•	1	Din rail channel	
	9096 4183 25	•	6	End clamp	
	9096 4183 26	•	5	End plate dd	
	9096 5039 00	•	1	Earthing cable	
	9096 5095 00	•	1	Wire harness	
	1621 4226 13		2	Lable	
	9096 4423 00		1	Temp.scanner ZT250 7.5 bar(e) 250KW,3.3KV S ZT250 7.5 bar(e) 250KW,6.6KV S ZT250 8.6 bar(e) 250KW,3.3KV S ZT250 8.6 bar(e) 250KW,6.6KV S ZT250 10 bar(e) 250KW,3.3KV S ZT250 10 bar(e) 250KW,6.6KV S **Zt250 modular pack complete**	
	9096 4962 00		**1**	**Kit starter w/0 starter**	
	9096 4183 03	•	1	Ac contactor	
	9096 4183 04	•	1	Aux. Contactor	
	9096 4183 56	•	2	Relay	

Ref.	Part number		Qty	Name	Remarks
	9096 4183 56	•	2	Ac contactor-	
	9096 4183 07	•	2	Aux relay	
	9096 4183 57	•	4	Addon block	
	9096 4183 58	•	2	Timer pod	
	9096 4183 03	•	2	Ac contactor	
	9096 4183 07	•	2	Aux relay	
	9096 4184 03	•	2	Biametal overload relay	
	9096 4183 10	•	1	Transformer	
	9096 4183 11	•	1	Transformer	
	9096 4183 12	•	1	Transformer	
	9096 4183 13	•	2	Mcb-1p	
	9096 4183 15	•	3	Mcb-1p	
	9096 4183 16	•	3	Hrc fuse base	
	9096 4183 17	•	3	Hrc fuse base	
	9096 4183 18	•	1	Emergency stop pb	
	9096 4183 19	•	3	Nc element	
	9096 4183 20	•	1	Wago connector set	
	9096 4183 21	•	1	Copper busbar with hardware	
	9096 4183 22	•	6	Epoxy busbar support	
	9096 4183 23	•	44	Terminal	
	9096 4183 49	•	3	Power terminal	
	9096 4183 50	•	3	Power terminal	
	9096 4183 51	•	2	Power terminal	
	9096 4183 24	•	4	Earthing terminal	
	9096 4183 25	•	3	End clamp	
	9096 4183 26	•	11	End plate dd	
	9096 4183 27	•	180	Control cable	
	9096 4183 28	•	14.5	Control cable	
	9096 4183 29	•	6	Control cable	
	9096 4183 30	•	21	Control cable	
	9096 4183 31	•	3	Control cable	
	9096 4183 32	•	12.5	Power cable	
	9096 4183 33	•	11.5	Power cable	
	9096 4183 34	•	9.5	Power cable	
	9096 4183 35	•	2	Power cable	
	9096 4183 36	•	6	Earth cable	
	9096 4183 37	•	1	Acrylic shourding set	
	9096 5158 00	•	0	Base plate	
	9096 4183 39	•	1	Consumable	
	9096 4183 40	•	2	Earth bolt	
	9096 4183 41	•	2	Din rail channel	
	9096 4183 42	•	4	Pvc channel	
	9096 4183 43	•	1	Packing box	
	9096 4183 44	•	1	Label set	
1010	9096 4255 51	•	1	Service diagram	
	9096 4183 46	•	1	Fan for cubical	
	9096 4183 47	•	1	Filter	
	9096 4183 48	•	1	Din rail channel	
	9096 4183 25	•	6	End clamp	
	9096 4183 26	•	5	End plate dd	
	9096 5039 00	•	1	Earthing cable	
	9096 5095 00	•	1	Wire harness	
	1621 4226 14		2	Lable	
	9096 4423 00		1	Temp.scanner ZT275 7.5 bar(e) 275KW,3.3KV S ZT 275 7.5 bar(e) 275KW,6.6KV S ZT275 8.6 bar(e) 275KW,3.3KV S ZT275 8.6 bar(e) 275KW,6.6KV S ZT275 10 bar(e) 275KW,3.3KV S	

33

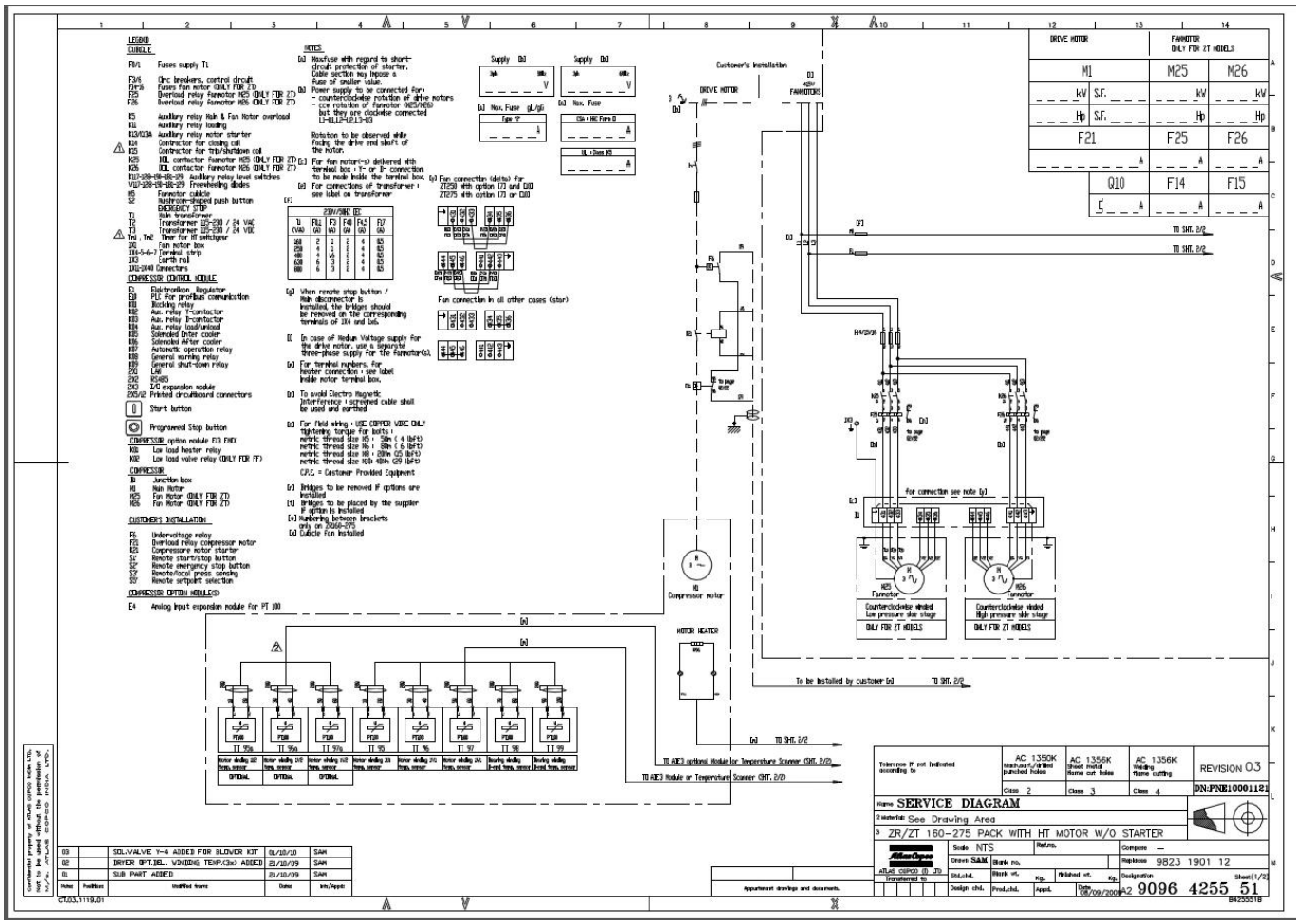
SERVICE DIAGRAM
See Drawing Area
ZR/ZT 160-275 PACK WITH HT MOTOR W/O STARTER
REVISION 03
9823 1901 12
9096 4255 51

Electrical kit starter

Ref.	Part number		Qty	Name	Remarks
				ZT275 10 bar(e)	
				275KW,6.6KV S	
				Zt275 modular pack complete	
	9096 4962 00		**1**	**Kit starter w/0 starter**	
	9096 4183 03	•	1	Ac contactor	
	9096 4183 04	•	1	Aux. Contactor	
	9096 4183 56	•	2	Relay	
	9096 4183 56	•	2	Ac contactor-	
	9096 4183 07	•	2	Aux relay	
	9096 4183 57	•	4	Addon block	
	9096 4183 58	•	2	Timer pod	
	9096 4183 03	•	2	Ac contactor	
	9096 4183 07	•	2	Aux relay	
	9096 4184 03	•	2	Biametal overload relay	
	9096 4183 10	•	1	Transformer	
	9096 4183 11	•	1	Transformer	
	9096 4183 12	•	1	Transformer	
	9096 4183 13	•	2	Mcb-1p	
	9096 4183 15	•	3	Mcb-1p	
	9096 4183 16	•	3	Hrc fuse base	
	9096 4183 17	•	3	Hrc fuse base	
	9096 4183 18	•	1	Emergency stop pb	
	9096 4183 19	•	3	Nc element	
	9096 4183 20	•	1	Wago connector set	
	9096 4183 21	•	1	Copper busbar with hardware	
	9096 4183 22	•	6	Epoxy busbar support	
	9096 4183 23	•	44	Terminal	
	9096 4183 49	•	3	Power terminal	
	9096 4183 50	•	3	Power terminal	
	9096 4183 51	•	2	Power terminal	
	9096 4183 24	•	4	Earthing terminal	
	9096 4183 25	•	3	End clamp	
	9096 4183 26	•	11	End plate dd	
	9096 4183 27	•	180	Control cable	
	9096 4183 28	•	14.5	Control cable	
	9096 4183 29	•	6	Control cable	
	9096 4183 30	•	21	Control cable	
	9096 4183 31	•	3	Control cable	
	9096 4183 32	•	12.5	Power cable	
	9096 4183 33	•	11.5	Power cable	
	9096 4183 34	•	9.5	Power cable	
	9096 4183 35	•	2	Power cable	
	9096 4183 36	•	6	Earth cable	
	9096 4183 37	•	1	Acrylic shourding set	
	9096 5158 00	•	0	Base plate	
	9096 4183 39	•	1	Consumable	
	9096 4183 40	•	2	Earth bolt	
	9096 4183 41	•	2	Din rail channel	
	9096 4183 42	•	4	Pvc channel	
	9096 4183 43	•	1	Packing box	
	9096 4183 44	•	1	Label set	
1010	9096 4255 51	•	1	Service diagram	
	9096 4183 46	•	1	Fan for cubical	
	9096 4183 47	•	1	Filter	
	9096 4183 48	•	1	Din rail channel	
	9096 4183 25	•	6	End clamp	
	9096 4183 26	•	5	End plate dd	
	9096 5039 00	•	1	Earthing cable	
	9096 5095 00	•	1	Wire harness	
	1621 4226 15		2	Lable	
	9096 4423 00		1	Temp.scanner	

34

Vci packing kit

Ref.	Part number	Qty	Name	Remarks
			ZR160 7.5 bar(e) 190KW/ 3.3KV O	
			ZR160 7.5 bar(e) 190KW/ 6.6KV O	
			ZR160 7.5 bar(e) 200KW/ 3.3KV O	
			ZR160 7.5 bar(e) 200KW/ 6.6KV O	
			ZR160 8.6 bar(e) 175KW/ 3.3KV O	
			ZR160 8.6 bar(e) 175KW/ 6.6KV O	
			ZR160 8.6 bar(e) 190KW/ 3.3KV O	
			ZR160 8.6 bar(e) 190KW/ 6.6KV O	
			ZR160 10 bar(e) 165KW/ 3.3KV O	
			ZR160 10 bar(e) 165KW/ 6.6KV O	
			ZR160 10 bar(e) 175KW/ 3.3KV O	
			ZR200 7.5 bar(e) 240KW/ 3.3KV O	
			ZR200 7.5 bar(e) 240KW/ 6.6KV O	
			ZR200 7.5 bar(e) 255KW/ 3.3KV O	
			ZR200 7.5 bar(e) 255KW/ 6.6KV O	
			ZR200 8.6 bar(e) 220KW/ 3.3KV O	
			ZR200 8.6 bar(e) 220KW/ 6.6KV O	
			ZR200 8.6 bar(e) 240KW/ 3.3KV O	
			ZR200 8.6 bar(e) 240KW/ 6.6KV O	
			ZR200 8.6 bar(e) 240KW/ 6.6KV O	
			ZR200 10 bar(e) 200KW/ 3.3KV O	
			ZR200 10 bar(e) 200KW/ 6.6KV O	
			ZR200 10 bar(e) 220KW/ 3.3KV O	
			ZR200 10 bar(e) 220KW/ 6.6KV O	
			ZR250 7.5 bar(e) 300KW/ 3.3KV O	
			ZR250 7.5 bar(e) 300KW/ 6.6KV O	
			ZR250 7.5 bar(e) 320KW/ 3.3KV O	
			ZR250 7.5 bar(e) 320KW/ 6.6KV O	
			ZR250 8.6 bar(e) 280KW/ 3.3KV O	
			ZR250 8.6 bar(e) 280KW/ 6.6KV O	
			ZR250 8.6 bar(e) 300KW/ 3.3KV O	
			ZR250 8.6 bar(e) 300KW/ 6.6KV O	
			ZR250 10 bar(e) 255KW/ 3.3KV O	
			ZR250 10 bar(e) 255KW/ 6.6KV O	
			ZR250 10 bar(e) 280KW/ 3.3KV O	
			ZR250 10 bar(e) 280KW/ 6.6KV O	
			ZR275 7.5 bar(e) 320KW/ 3.3KV O	
			ZR275 7.5 bar(e) 320KW/ 6.6KV O	
			ZR275 7.5 bar(e) 345KW/ 3.3KV O	
			ZR275 7.5 bar(e) 345KW/ 6.6KV O	
			Vci packing kit	
	9096 5159 20	1	Partlist	
	9096 9019 27	5	Dhf 555	
	9096 5300 00	1	Kit a	
	9096 5300 10	1	Kit b	
			ZT160 7.5 bar(e) 160KW,3.3KV S	
			ZT160 7.5 bar(e) 160KW,6.6KV S	
			ZT160 8.6 bar(e) 160KW,3.3KV S	
			ZT160 8.6 bar(e) 160KW,6.6KV S	
			ZT160 10 bar(e) 160KW,3.3KV S	
			ZT160 10 bar(e) 160KW,6.6KV S	
			ZT200 7.5 bar(e) 200KW,3.3KV S	
			ZT200 7.5 bar(e) 200KW,6.6KV S	
			ZT200 8.6 bar(e) 200KW,3.3KV S	
			ZT200 8.6 bar(e) 200KW,6.6KV S	
			ZT 200 10 bar(e) 200KW,3.3KV S	

34

Vci packing kit

34

Ref.	Part number	Qty	Name	Remarks
			ZT200 10 bar(e)	
			200KW,6.6KV S	
			ZT250 7.5 bar(e)	
			250KW,3.3KV S	
			ZT250 7.5 bar(e)	
			250KW,6.6KV S	
			ZT250 8.6 bar(e)	
			250KW,3.3KV S	
			ZT250 8.6 bar(e)	
			250KW,6.6KV S	
			ZT250 10 bar(e)	
			250KW,3.3KV S	
			ZT250 10 bar(e)	
			250KW,6.6KV S	
			ZT275 7.5 bar(e)	
			275KW,3.3KV S	

Ref.	Part number	Qty	Name	Remarks
			ZT 275 7.5 bar(e)	
			275KW,6.6KV S	
			ZT275 8.6 bar(e)	
			275KW,3.3KV S	
			ZT275 8.6 bar(e)	
			275KW,6.6KV S	
			ZT275 10 bar(e)	
			275KW,3.3KV S	
			ZT275 10 bar(e)	
			275KW,6.6KV S	
			Vci packing kit	
	9096 5300 60	1	Kit a	
	9096 5300 70	1	Kit b	
	9096 9019 27	5	Dhf 555	
	9096 5159 30	1	Partlist	
	2908 8500 00	0.07	Roto	

Notes:

Notes:

Notes:

Atlas Copco Stationary Air Compressors

ZR/ZT 160-275 HV

Parts list

What sets Atlas Copco apart as a company is our conviction that we can only excel in what we do if we provide the best possible know-how and technology to really help our customers produce, grow and succeed.

There is a unique way of achieving that - we simply call it the Atlas Copco way. It builds on **interaction**, on long-term relationships and involvement in the customers' process, needs and objectives. It means having the flexibility to adapt to the diverse demands of the people we cater for.

It's the **commitment** to our customers' business that drives our effort towards increasing their productivity through better solutions. It starts with fully supporting existing products and continuously doing things better, but it goes much further, creating advances in technology through **innovation**. Not for the sake of technology, but for the sake of our customer's bottom line and peace-of-mind.

That is how Atlas Copco will strive to remain the first choice, to succeed in attracting new business and to maintain our position as the industry leader.

No.9095 0503 55 / DC 2013.08

* 9 0 9 5 0 5 0 3 5 5 *