Atlas Copco Rocket Boomer

ML2D

Diagrams and Drawings

جهان کمپرسور
Jahan Compressor

PM No. 8991 4813 00

Atlas Copco

© Copyright 2008, Atlas Copco Rock Drills AB, Sweden
Any unauthorized use or copying of the contents or any part thereof is prohibited.
This applies in particular to trademarks, model denominations, part numbers and drawings.
Obehörigt utnyttjande eller kopiering av innehållet eller del därav är förbjudet.
Detta gäller speciellt varumärken, modellbeteckningar, reservdelsnummer och ritningar.

Atlas Copco Rock Drills AB
SE-70191 Örebro, Sweden

Table of Content / Innehållsförteckning

Air diagram **5**

Electric diagram **9**

Hydraulic diagram **59**

Overview: Dimension drawing **79**

Water diagram **91**

Air diagram
LIST OF CONTENTS

Art.no.	Description	Remarks	Page
9106077915	AIR SCHEDULE	HOLE BLOWING	6
9106077920	AIR SCHEDULE	DCS, 2-BOOM	7

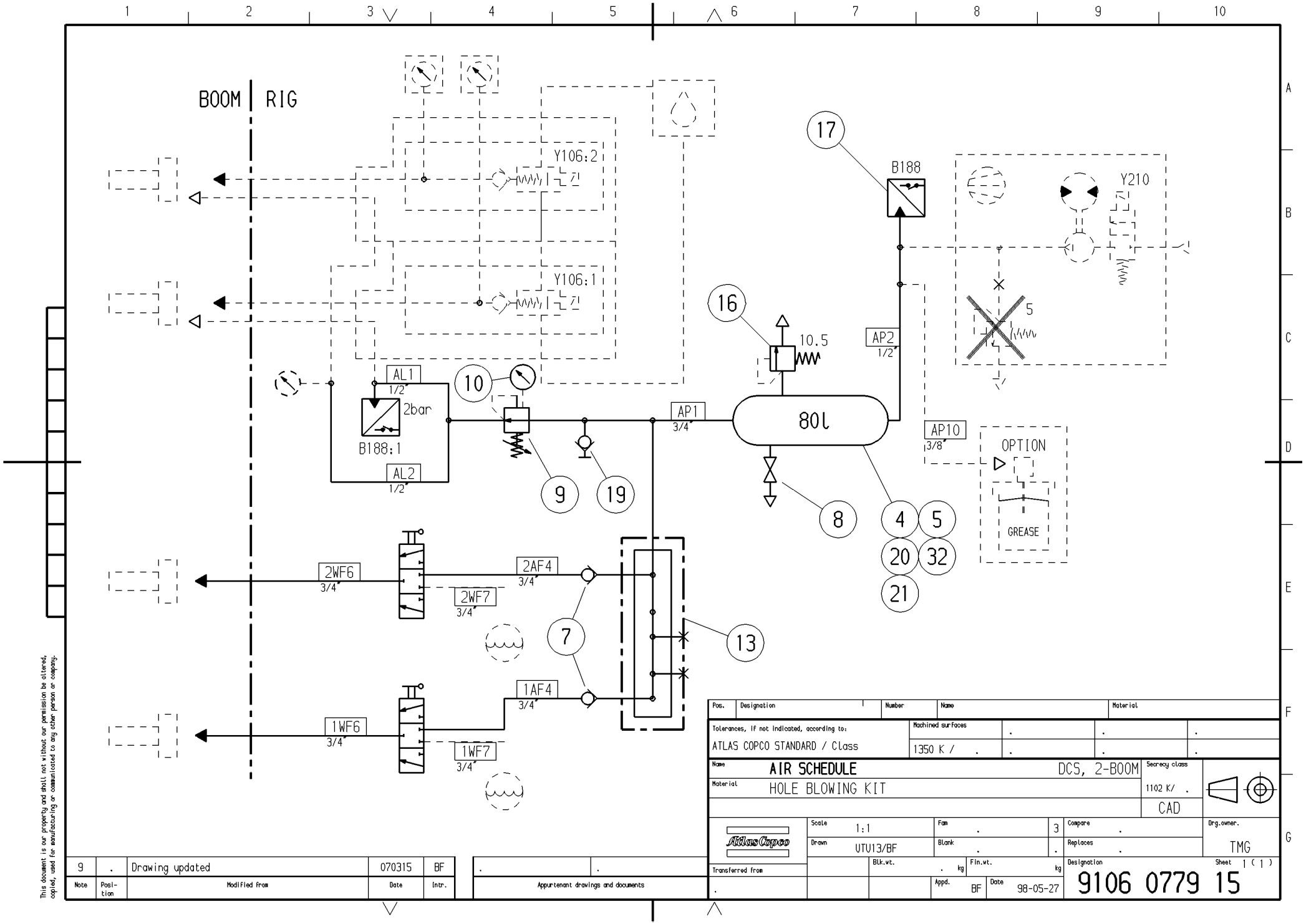

Pos.	Designation	Number	Name	Material

Tolerances, IF not indicated, according to: ATLAS COPCO STANDARD / Class

Machined surfaces: 1350 K /

Name: AIR SCHEDULE — DCS, 2-BOOM

Material: HOLE BLOWING KIT

Secrecy class: 1102 K/ .

CAD

Scale: 1:1 | Fam: . | 3 | Compare: . | Drg.owner: TMG

Drawn: UTU13/BF | Blank: . | . | Replaces: .

Transferred from: . | Blk.wt: . kg | Fin.wt: kg | Designation: 9106 0779 15 | Sheet 1 (1)

Appd. BF | Date 98-05-27

Note	Position	Modified from	Date	Intr.
9	.	Drawing updated	070315	BF

Appurtenant drawings and documents: . | .

This document is our property and shall not without our permission be altered, copied, used for manufacturing or communicated to any other person or company.

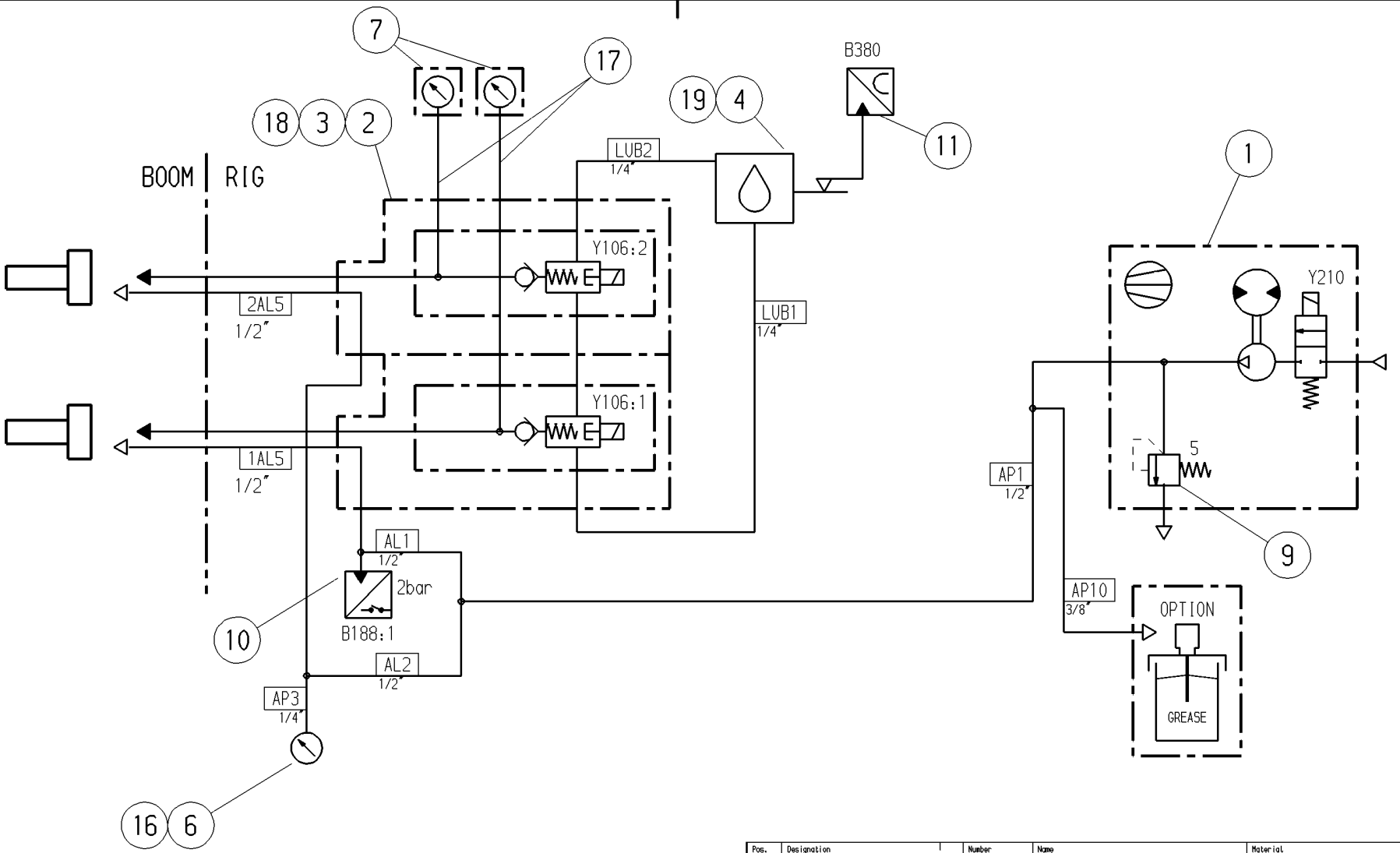

Pos.	Designation	Number	Name	Material

Tolerances, IF not indicated, according to:	Machined surfaces			
ATLAS COPCO STANDARD / Class	1350 K / .	.	.	.

Name	AIR SCHEDULE	DCS, 2-BOOM	Secrecy class
Material	AIR SYSTEM		1102 K/ .
			CAD

Scale	1:1	Fam	.	3	Compare	.	Drg.owner.
Drawn	UTUMF	Blank	.	.	Replaces	.	TMG
Transferred from		Blk.wt.	. kg	Fin.wt.	kg	Designation	Sheet 1 (1)
.			Appd. BF	Date 98-05-27		9106 0779 20	

Note	Position	Modified from	Date	Intr.
8	A6	Pos 11 added TMG075280	070611	BF

Appurtenant drawings and documents	
.	.

This document is our property and shall not without our permission be altered, copied, used for manufacturing or communicated to any other person or company.

Electric diagram
LIST OF CONTENTS

Art.no.	Description	Remarks	Page
3217883561	EL.CIRC.DIAGRAM	INTERNAL CONNECTIONS	10
5112002703	CIRCUIT DIAGRAM	24VDC	11-23
5112002705	CONNECTION DIAG	230VAC PROTECT.ROOF	24
5112002714	CONNECTION DIAG	JUNCTION BOX A51 / BOOM FRAME	25-26
5112002718	CONNECTION DIAG	A50/BATTERY PACK/ ENGINE FRAME	27-29
5112002723	CONNECTION DIAG	JUNCTION BOX A52/REAR FRAME	30-31
5112002734	CONNECTION DIAG	HYDRAULIC PANEL A71	32-34
5112002735	CONNECTION DIAG	ROOF PANEL A72	35-36
5112002924	DRAWING	EMERGENCY SET A41	37
5112002987	DRAWING	CABLE GUIDE	38-39
5112313479	DRAWING	CONN.CABLE NORDIC LIGHT	40
9106010028	DRAWING	SAFE-BOLTING LAYOUT	41
9106010030	CONNECTION DIAG	SAFE BOLTING	42-43
9106218434	CONNECTION DIAG	DCS18-75-2 EXTERNAL A10	44-46
9106218444	CONNECTION DIAG	DCS18-75-2 EXTERNAL A10	47-49
9106218445	CIRCUIT DIAGRAM	DCS18-75-2 INTERNAL A10	50-58

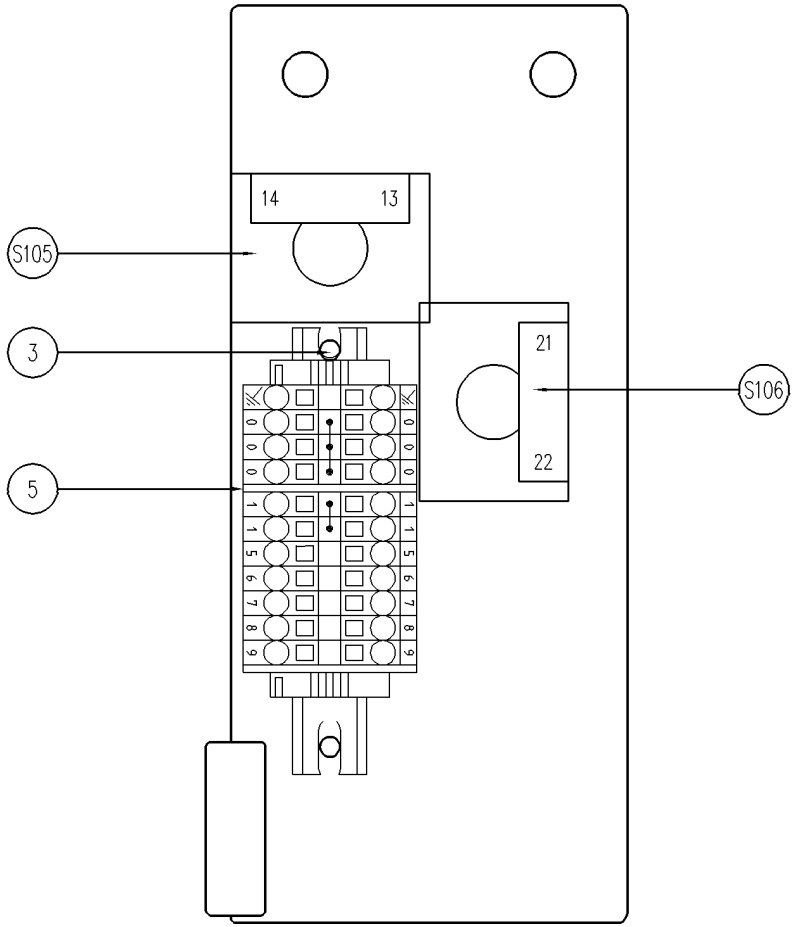

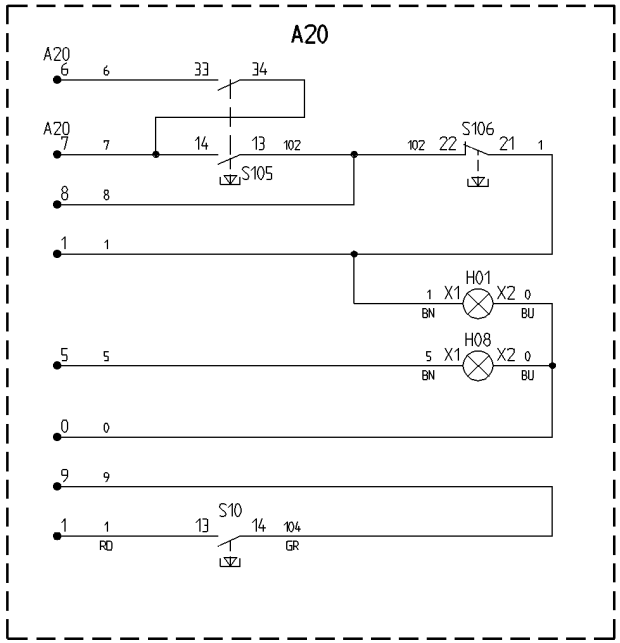

Note	Pos.	Modified from	Date	Sign.
6		H08 INF.PLINTNR. JUST. TMG069070	06-11-16	LJ
5	·	KONTAKTBLOCK & PLINT TILLK.TMG062146	06-03-08	LJ
4	·	Pos 4 utgår.Plintrad & schema ändrad	05-01-13	JE
3	·	Placeringsritning tillkom TMG040643	04-04-30	JE
2	·	PLINTRAD TILLKOMMIT TMG034670	03-08-29	LJ
1	·	FÄRGMÄRKNING TILLKOMMIT. TMG026031	02-12-17	AW

Pos.	Designation	Number	Name	Material

Tolerances, if not indicated, according to: ATLAS COPCO STANDARD/Class

Machined surfaces: 1350 K / 2 | 1356 K / C | 1355 K / N

Name: INTERNAL CONNECTIONS A20

Material: DCS-panel L2D / M2D

Secrecy class: 1102 K/ ACAD

Atlas Copco

Transferred fr.

Scale 1:1	Fam. .	3	Compare .	Drg.owner TMG	
Drawn AVOAW			Replaces .		
Std.chd.	Blk.wt. kg	Fin.wt. .kg	Designation	Sheet 1 (1)	
Design chd. .	Prod.chd. .	Appd. LJ	Date 2002-01-10	3217 8835 61	

This document is our property and shall not, without our permission be altered, copied, used for manufacturing or communicated to any other person or company.

Ver 30

B143 HYDRAULIC OIL LEVEL SWITCH
B186 LUBRICATION PRESSURE SWITCH
B334 WATER LEVEL SWITCH FUEL FILTER
B350 BRAKE OIL PRESSURE SWITCH
B351 PARKING BRAKE PRESSURE SWITCH
B352 FUEL LEVEL SWITCH
B353 ENGINE OIL PRESSURE SWITCH
B355 TRANSMISSION OIL PRESSURE INDICATION SWITCH
B356 TRANSMISSION OIL PRESSURE INTERLOCK SWITCH
B357 TRANSMISSON OIL TEMP SWITCH
B358 CABLE REEL LIMIT SWITCH
B359 HYDRAULIC OIL PRESSURE INTERLOCK SWITCH
B360 AIR FILTER PRESSURE SWITCH
B361 COOLANT LEVEL SWITCH
B364 BRAKE LIGHT PRESSURE SWITCH
B381 AIR CONDITION PRESSURE SWITCH
B382 ELECTRICAL FOOT THROTTLE
E101 TRAMMING LIGHT FRAME REAR
E102 TRAMMING LIGHT FRAME FRONT
E103 TRAMMING LIGHT ROOF FRONT
E104 TRAMMING LIGHT ROOF REAR
E105 STAIR LIGHT LEFT
E106 STAIR LIGHT RIGHT
E109 SPOTLIGHT LEFT
E110 SPOTLIGHT RIGHT
E111 CABIN LIGHT
E113 CD-PLAYER
E114 REMOTE SPOTLIGHT LEFT
E116 REMOTE SPOTLIGHT RIGHT
E134 LEFT POS LASER
E135 RIGHT POS LASER
F108 FUSE RCS BACK-UP BATTERY
F110 FUSE STARTER
F111 FUSE PREHEATING
F112 FUSE MANOEUVRE
F113 FUSE MANOEUVRE
F114 FUSE OIL FILLING PUMP
F115 FUSE AIR CONDITION, CD-PLAYER
F116 FUSE MANOEUVRE
F117 FUSE TRAMMING LIGHT
F118 FUSE TRAMMING LIGHT
F119 FUSE AIR CONDITION, REAR WIPER
F120 FUSE CABIN LIGHT, SPOTLIGHT
F131 FUSE EMR
F133 MAIN FUSE RCS
F135 MAIN FUSE A50
F136 MAIN FUSE A50
G100 MAIN BATTERY
G101 ALTENATOR
G102 RCS BACK-UP BATTERY
H121 REVERSE ALARM
H186 HORN
H200 PREE-HEATING INDICATION
H201 CHARGING INDICATION
H202 ENGINE OIL PRESSURE INDICATION
H203 HYDRAULIC OIL LEVEL INDICATION
H204 ENGINE TEMP INDICATION
H205 TRANSMISSION OIL TEMP INDICATION
H206 BRAKE OIL PRESSURE INDICATION
H207 AIR FILTER INDICATION
H208 PARKING BRAKE INDICATION
H209 CABLE REEL INDICATION
H210 COOLANT LEVEL INDICATION
H215 WARNING LIGHT (BEACON)
H217 BRAKE LIGHT
H219 TRANSMISSION OIL PRESSURE INDICATION
H220 DIESEL ENGINE ALARM INDICATION
K101 START RELAY
K102 HYDRAULIC OIL LEVEL RELAY
K104 MASTER RELAY
K105 ENGINE OIL PRESSURE RELAY
K106 PARKING BRAKE INTERLOCK RELAY
K111 EMERGENCY LIGHT RELAY
K112 REAR WIPER ON DELAY RELAY
K113 REAR WIPER OFF DELAY RELAY
K114 RCS SYSTEM SHUT-DOWN RELAY
K115 REVERSE ALARM RELAY
K116 TRAMMING LIGHT RELAY ROOF FRONT
K117 TRAMMING LIGHT RELAY ROOF REAR
K118 CONDENSOR FAN RELAY
K119 RCS SYSTEM ON RELAY
K121 TRAMMING LIGHT RELAY FRAME FRONT
K122 TRAMMING LIGHT RELAY FRAME REAR
K136 EMR POWER SUPPLY RELAY
M100 DIESEL ENGINE
M101 STARTER
M102 OIL FILLING PUMP
M103 FRONT WIPER
M104 FRONT WASHER PUMP
M107 CONDENSOR FAN
M108 REAR WIPER
M109 REAR WASHER PUMP
M110 DEFROSTER
M113 LUBRICATION PUMP
N101 PREE-HEATING RELAY
N106 AIR CONDITION CONTROL UNIT
P110 HOUR METER DIESEL ENGINE
P111 FUEL LEVEL METER
R101 PREE-HEATING ELEMENT
S133:1 EMERGENCY STOP DRILLPANEL 1
S133:2 EMERGENCY STOP HYDRAULIC CONTROL PANEL
S133:3 EMERGENCY STOP SERVICE PLATFORM
S133:4 EMERGENCY STOP DRILLPANEL 2
S133:5 EMERGENCY STOP RIGHT SIDE CABIN/PLATFORM
S133:6 EMERGENCY STOP LEFT SIDE CABIN/PLATFORM
S136 BY-PASS BUTTON LIMIT SWITCH CABLE REEL
S137 GEAR CHANGER SWITCH
S138 PARKING BRAKE SWITCH
S139 STARTER KEY
S141 DIESEL POS SWITCH
S143 DUAL CONTROL CABLE REEL SWITCH
S144 DUAL CONTROL WATER REEL SWITCH
S145 FRONT WIPER/WASHER SWITCH
S146 REAR WIPER/WASHER SWITCH
S147 STAIR LIGHT SWITCH
S157 TEST BUTTON PARKING BRAKE
S178 LAMP TEST BUTTON
S186 HORN BUTTON
S195 OIL FILLING BUTTON
S207 EXTENSION JACKS FRONT SWITCH
S209 REAR JACKS SWITCH
S210 FRONT JACKS LEFT SWITCH
S211 FRONT JACKS RIGHT SWITCH
S248 CABLE REEL SWITCH
S249 WATER REEL SWITCH
S300 BATTERY SWITCH
S302 DEFROSTER SWITCH
S305 ELECTRICAL HAND THROTTLE
S307 TRAMMING LIGHT SWITCH ROOF
S308 TRAMMING LIGHT SWITCH FRAME
S309 LASER SWITCH
S310 RCS SYSTEM OFF BUTTON
S311 RCS SYSTEM ON BUTTON
S500 PROTECTION ROOF RIGHT SWITCH
S501 PROTECTION ROOF LEFT SWITCH
T101 DC CONVERTER 24V/12V CD-PLAYER
T102 DC CONVERTER 24V/12V OUTLET
V100 DIOD UNIT LAMP TEST
V103 DIODE UNIT EMERGENCY LIGHT FRONT
V104 DIODE UNIT EMERGENCY LIGHT REAR
V105 DIODE UNIT HORN
X 11 CHASSI GROUND CU-RAIL
X 23 TERMINAL CONTACT EMR
X131 12V OUTLET
X139 DIAGNOSIS OUTLET EMR
Y156 AIR CONDITION COMPRESSOR VALVE
Y203 DIESEL POS VALVE
Y216 PARKING BRAKE VALVE
Y217 GEAR VALVE
Y218 GEAR VALVE
Y219 GEAR VALVE REVERSE
Y220 GEAR VALVE FORWARD
Y226 FUEL FLOW SHUT DOWN VALVE
Y410 REAR JACKS VALVE
Y411 FRONT JACKS LEFT VALVE
Y412 FRONT JACKS RIGHT VALVE
Y414 CABLE REEL VALVE
Y415 WATER REEL VALVE
Y423 EXTENSION JACKS FRONT VALVE
Y436 PROTECTION ROOF LEFT VALVE
Y437 PROTECTION ROOF RIGHT VALVE

Note	Pos.	Modified from	Date	Sign.
4	SH.05	S305 ADJUSTED. TMG080951	07-12-19	AW
3	SH.02	F135 REPLACE F134. TMG080039	07-11-23	AW
2	SH.05	X139 ADJUSTED. TMG079367	07-11-06	AW
1	SH.04	B362 AND Y501 REMOVED. TMG078609	07-10-18	AW

Name CIRCUIT DIAGRAM
CARRIER
M/L MARK VII

Atlas Copco
Transferred fr.

Scale -
Fam.
3
Compare
Drg.owner TMG
Drawn AVOAW
Replaces
Std.chd.
Designation 5112 0027 03
Sheet 01(13)
Design chd.
Prod.chd.
Appd. AW
Date 07-01-22

This document is our property and shall not without our permission be altered, copied, used for manufacturing or communicated to any other person or company.

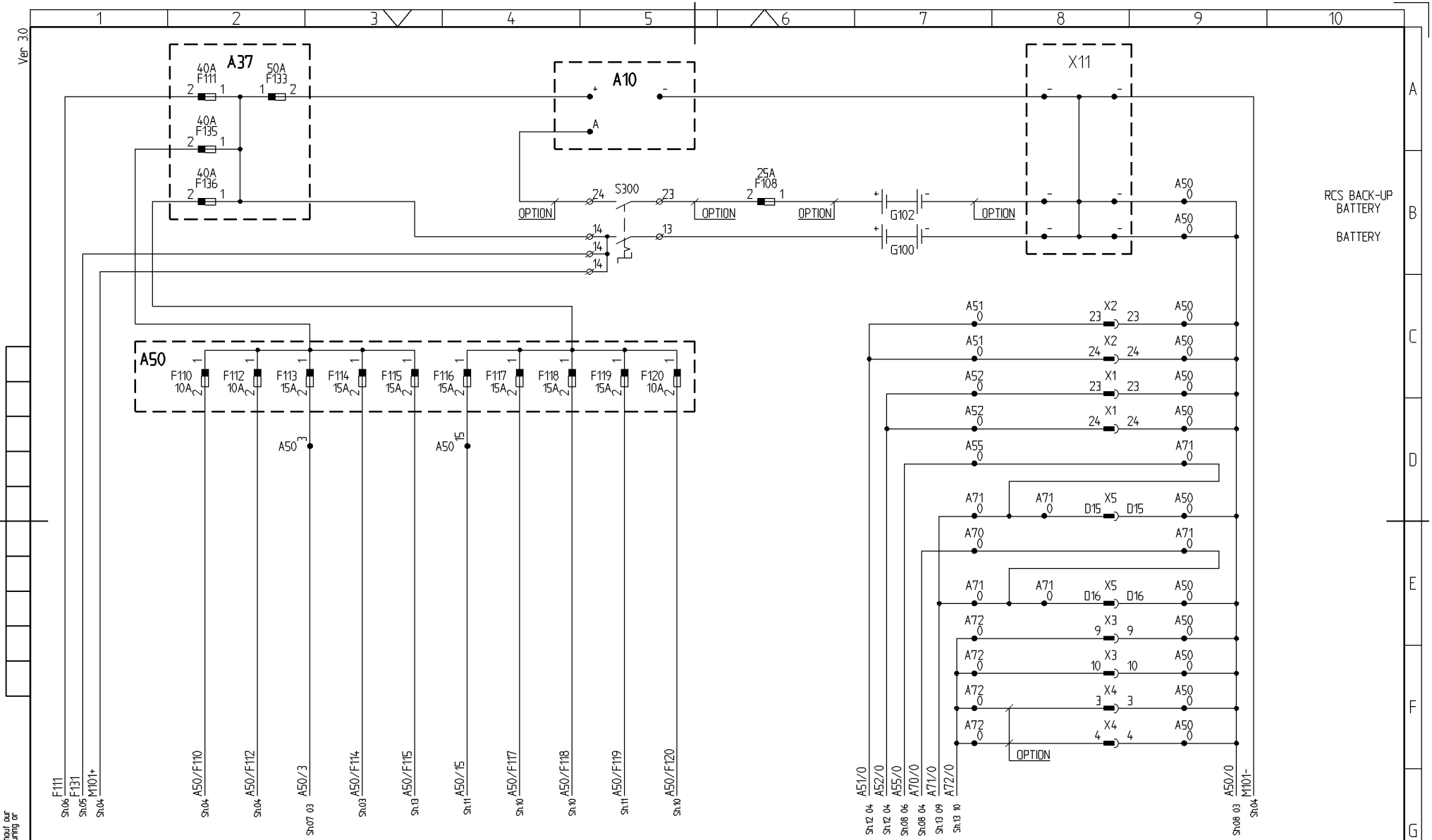

Note	Pos.	Modified from	Date	Sign.
4	SH.05	S305 ADJUSTED. TMG080951	07-12-19	AW
3	SH.02	F135 REPLACE F134. TMG080039	07-11-23	AW
2	SH.05	X139 ADJUSTED. TMG079367	07-11-06	AW
1	SH.04	B362 AND Y501 REMOVED. TMG078609	07-10-18	AW

Name: CIRCUIT DIAGRAM
CARRIER
M/L MARK VII

Atlas Copco
Transferred fr.

Scale: -
Fam.: .
3
Compare:
Drg.owner: TMG
Drawn: AVOAW
Replaces: .
Std.chd.: .
Designation:
Sheet 02 (13)
Design chd.: .
Prod.chd.: .
Appd.: AW
Date: 07-01-22
5112 0027 03

This document is our property and shall not, without our permission be altered, copied, used for manufacturing or communicated to any other person or company.

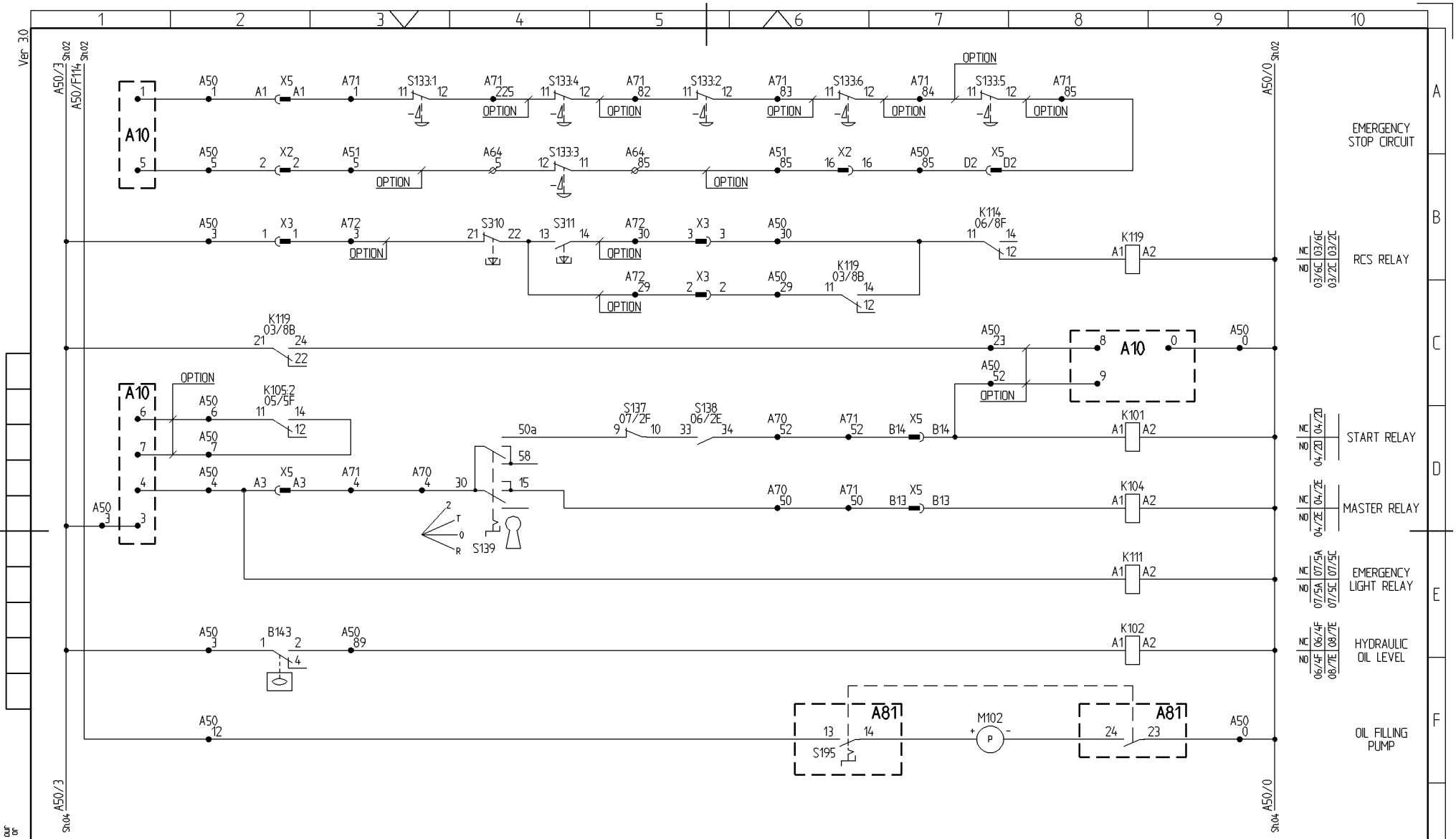

Note	Pos.	Modified from	Date	Sign.
4	SH.05	S305 ADJUSTED. TMG080951	07-12-19	AW
3	SH.02	F135 REPLACE F134. TMG080039	07-11-23	AW
2	SH.05	X139 ADJUSTED. TMG079367	07-11-06	AW
1	SH.04	B362 AND Y501 REMOVED. TMG078609	07-10-18	AW

Name: CIRCUIT DIAGRAM
CARRIER
M/L MARK VII

Atlas Copco

Transferred fr.

Scale: -
Fam.: .
3
Drawn: AVOAW
Std.chd.: .
Design chd.: .
Prod.chd.: .
Appd.: AW
Date: 07-01-22
Compare
Replaces: .
Drg.owner: TMG
Designation: 5112 0027 03
Sheet 03 (13)

This document is our property and shall not, without our permission be altered, copied, used for manufacturing or communicated to any other person or company.

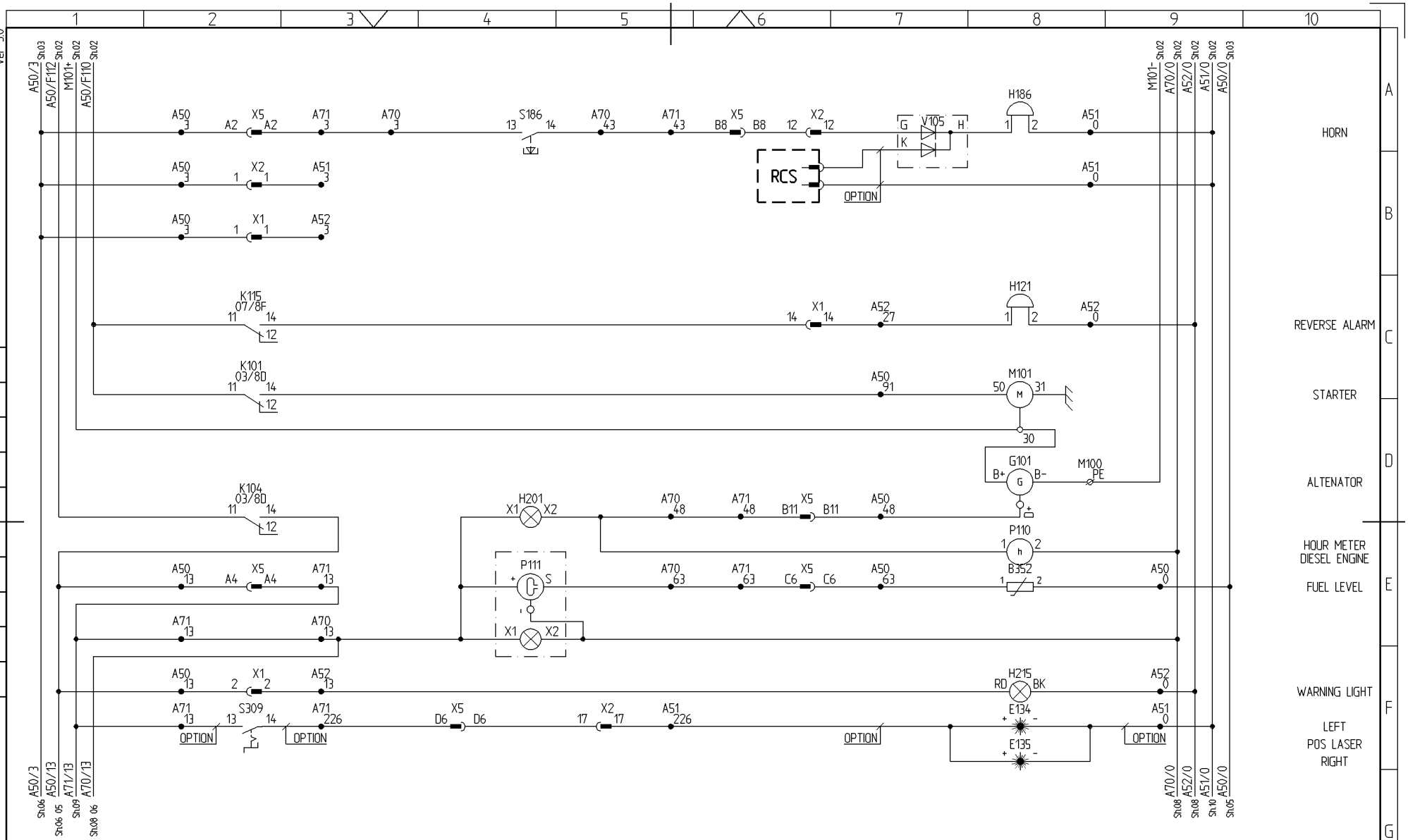

Note	Pos.	Modified from	Date	Sign.
4	SH.05	S305 ADJUSTED. TMG080951	07-12-19	AW
3	SH.02	F135 REPLACE F134. TMG080039	07-11-23	AW
2	SH.05	X139 ADJUSTED. TMG079367	07-11-06	AW
1	SH.04	B362 AND Y501 REMOVED. TMG078609	07-10-18	AW

Name: CIRCUIT DIAGRAM
CARRIER
M/L MARK VII

Atlas Copco
Transferred fr.

Scale: -	Fam. .	3	Compare	Drg.owner: TMG
Drawn: AVOAW			Replaces .	
Std.chd. .			Designation: 5112 0027 03	Sheet 04 (13)
Design chd. .	Prod.chd. .	Appd. AW	Date 07-01-22	

This document is our property and shall not, without our permission be altered, copied, used for manufacturing or communicated to any other person or company.

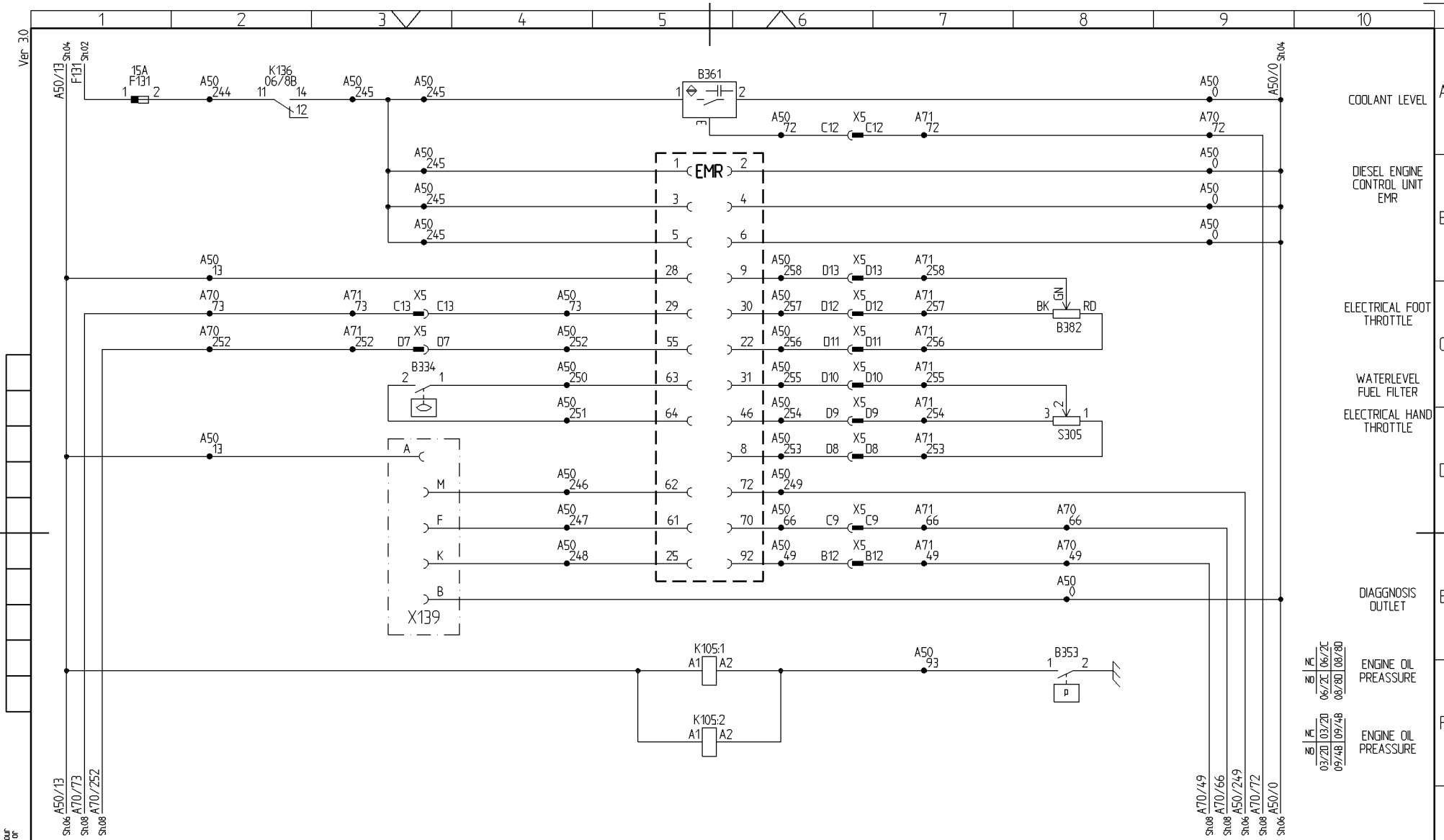

Note	Pos.	Modified from	Date	Sign.
4	SH.05	S305 ADJUSTED. TMG080951	07-12-19	AW
3	SH.02	F135 REPLACE F134. TMG080039	07-11-23	AW
2	SH.05	X139 ADJUSTED. TMG079367	07-11-06	AW
1	SH.04	B362 AND Y501 REMOVED. TMG078609	07-10-18	AW

Name: CIRCUIT DIAGRAM
CARRIER
M/L MARK VII

Atlas Copco
Transferred fr.

Scale: -
Fam.: .
3
Compare
Drg.owner: TMG
Drawn: AVOAW
Replaces: .
Std.chd.: .
Designation: 5112 0027 03
Sheet 05 (13)
Design chd.: .
Prod.chd.: .
Appd.: AW
Date: 07-01-22

This document is our property and shall not, without our permission be altered, copied, used for manufacturing or communicated to any other person or company.

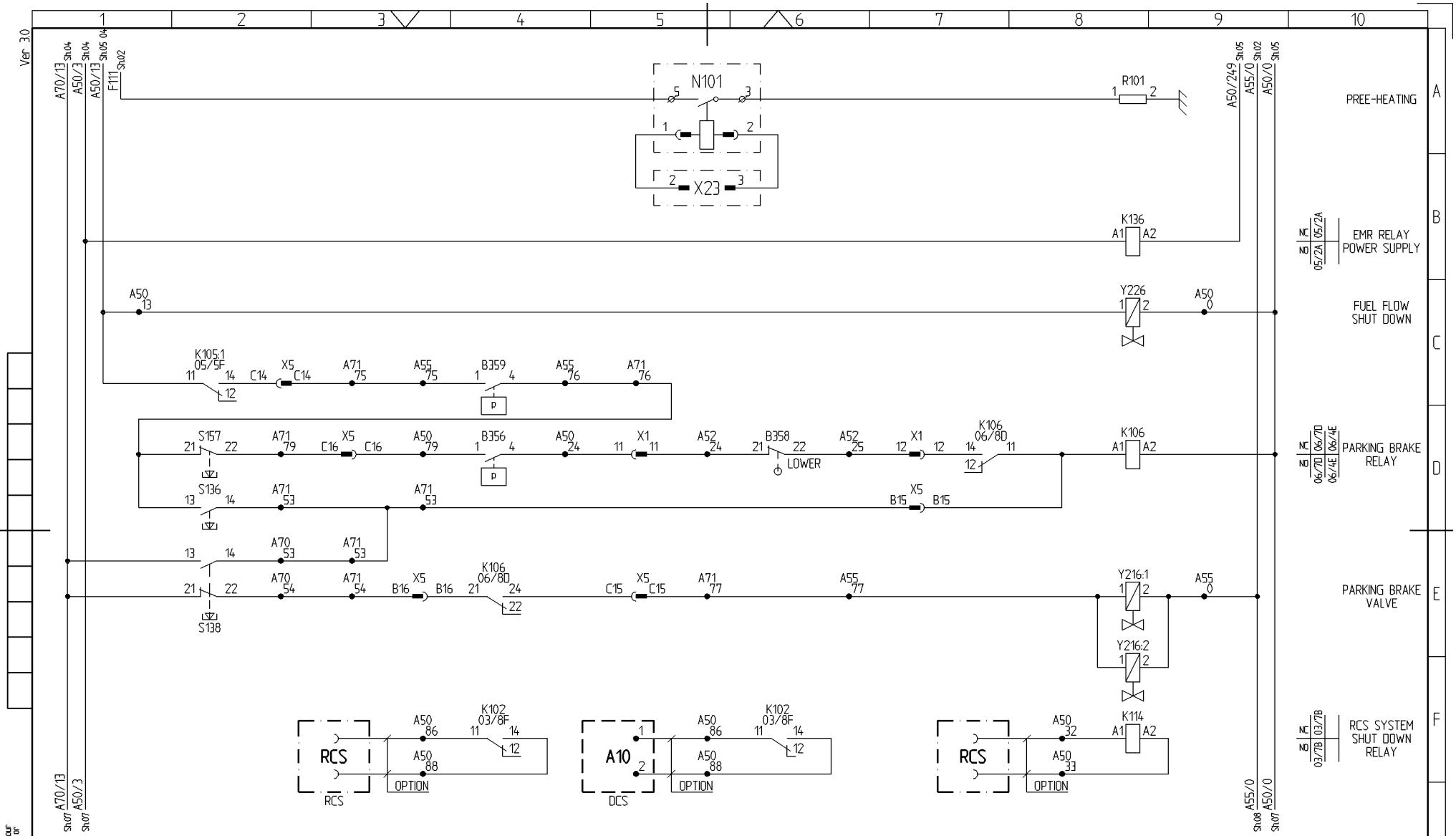

Note	Pos.	Modified from	Date	Sign.
4	SH.05	S305 ADJUSTED. TMG080951	07-12-19	AW
3	SH.02	F135 REPLACE F134. TMG080039	07-11-23	AW
2	SH.05	X139 ADJUSTED. TMG079367	07-11-06	AW
1	SH.04	B362 AND Y501 REMOVED. TMG078609	07-10-18	AW

Name: CIRCUIT DIAGRAM
CARRIER
M/L MARK VII

Atlas Copco

Transferred fr.

Scale: -
Fam.: 3
Compare
Drg.owner: TMG
Drawn: AVOAW
Replaces
Std.chd.
Designation: 5112 0027 03
Sheet 06 (13)
Design chd.
Prod.chd.
Appd.: AW
Date: 07-01-22

This document is our property and shall not without our permission be altered, copied, used for manufacturing or communicated to any other person or company.

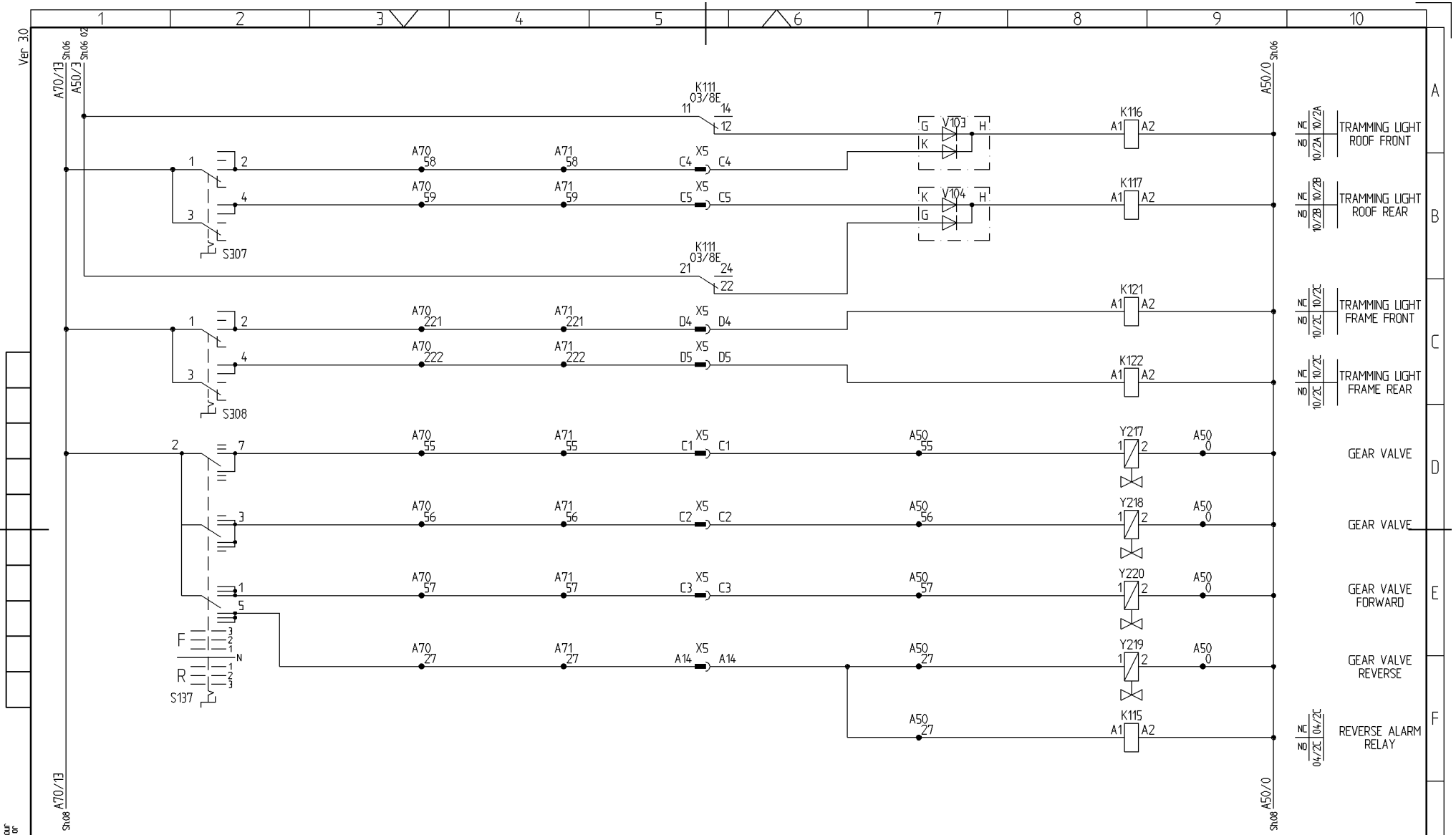

Note	Pos.	Modified from	Date	Sign.
4	SH.05	S305 ADJUSTED. TMG080951	07-12-19	AW
3	SH.02	F135 REPLACE F134. TMG080039	07-11-23	AW
2	SH.05	X139 ADJUSTED. TMG079367	07-11-06	AW
1	SH.04	B362 AND Y501 REMOVED. TMG078609	07-10-18	AW

Name: CIRCUIT DIAGRAM
CARRIER
M/L MARK VII

Atlas Copco
Transferred fr.

Scale: -
Fam.: .
3
Compare:
Drg.owner: TMG
Drawn: AVOAW
Replaces: .
Std.chd.: .
Designation: 5112 0027 03
Sheet 07 (13)
Design chd.: .
Prod.chd.: .
Appd.: AW
Date: 07-01-22

This document is our property and shall not, without our permission be altered, copied, used for manufacturing or communicated to any other person or company.

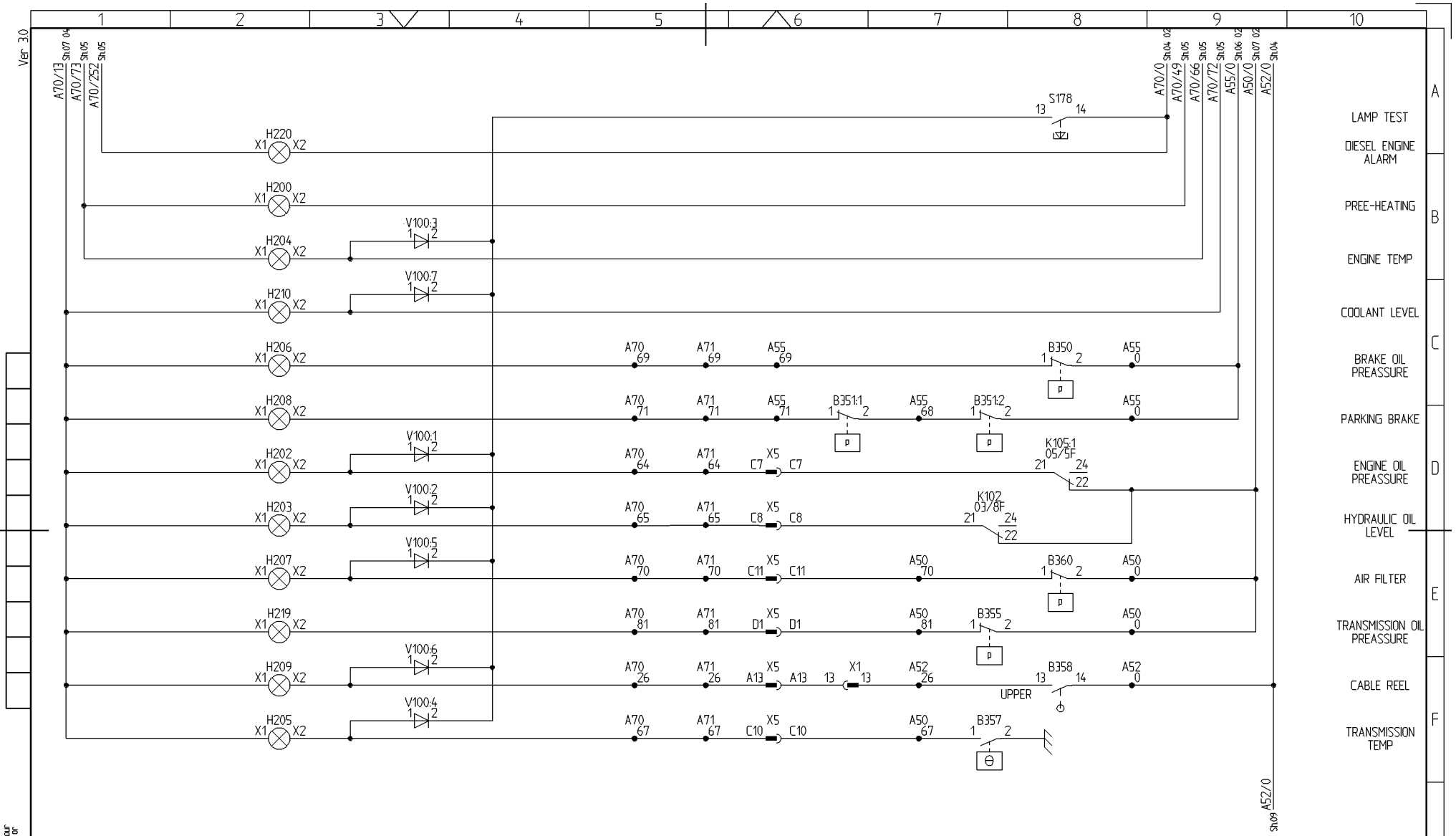

Note	Pos.	Modified from	Date	Sign.
4	SH.05	S305 ADJUSTED. TMG080951	07-12-19	AW
3	SH.02	F135 REPLACE F134. TMG080039	07-11-23	AW
2	SH.05	X139 ADJUSTED. TMG079367	07-11-06	AW
1	SH.04	B362 AND Y501 REMOVED. TMG078609	07-10-18	AW

Name: CIRCUIT DIAGRAM
CARRIER
M/L MARK VII

Atlas Copco
Transferred fr.

Scale: -
Fam.: .
3
Compare:
Drg.owner: TMG
Drawn: AVOAW
Replaces: .
Std.chd.: .
Designation: 5112 0027 03
Sheet 08 (13)
Design chd.: .
Prod.chd.: .
Appd.: AW
Date: 07-01-22

This document is our property and shall not, without our permission be altered, copied, used for manufacturing or communicated to any other person or company.

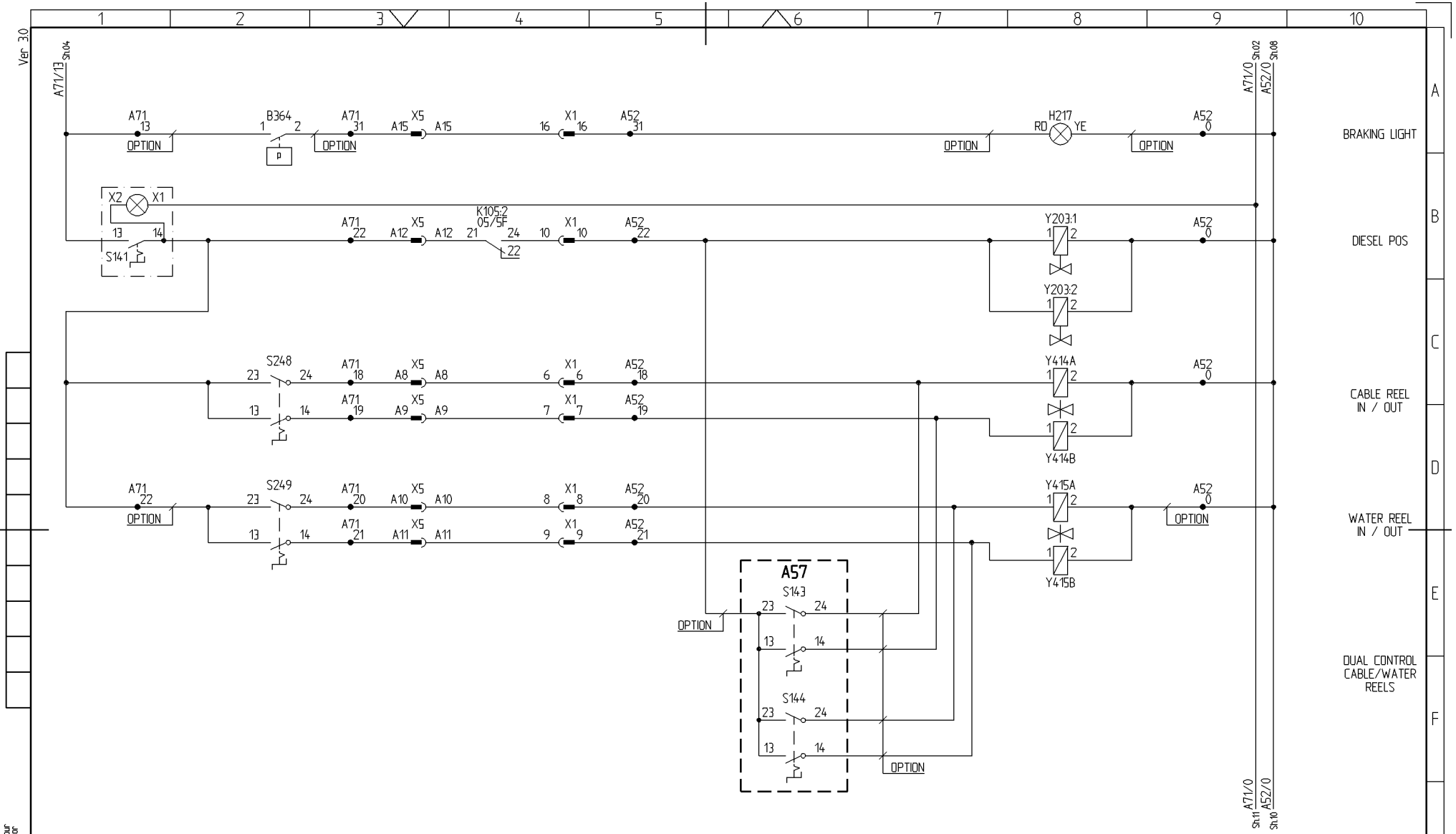

Note	Pos.	Modified from	Date	Sign.
4	SH.05	S305 ADJUSTED. TMG080951	07-12-19	AW
3	SH.02	F135 REPLACE F134. TMG080039	07-11-23	AW
2	SH.05	X139 ADJUSTED. TMG079367	07-11-06	AW
1	SH.04	B362 AND Y501 REMOVED. TMG078609	07-10-18	AW

Name: CIRCUIT DIAGRAM
CARRIER
M/L MARK VII

Atlas Copco
Transferred fr.

Scale: -
Fam.: .
3
Compare:
Drg.owner: TMG
Drawn: AVOAW
Replaces: .
Std.chd.: .
Designation:
Sheet 09 (13)
Design chd.: .
Prod.chd.: .
Appd.: AW
Date: 07-01-22
5112 0027 03

This document is our property and shall not, without our permission be altered, copied, used for manufacturing or communicated to any other person or company.

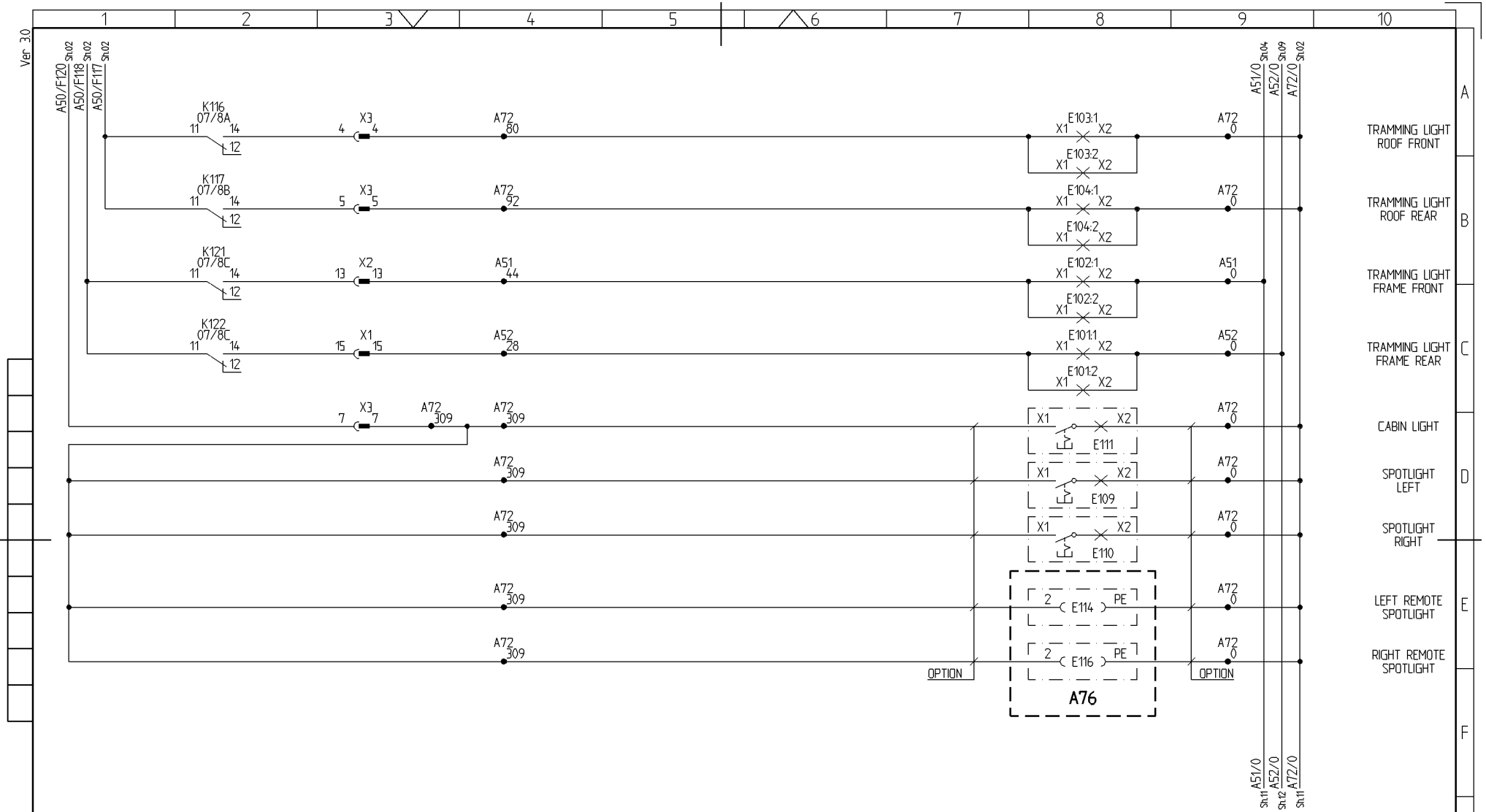

Note	Pos.	Modified from	Date	Sign.
4	SH.05	S305 ADJUSTED. TMG080951	07-12-19	AW
3	SH.02	F135 REPLACE F134. TMG080039	07-11-23	AW
2	SH.05	X139 ADJUSTED. TMG079367	07-11-06	AW
1	SH.04	B362 AND Y501 REMOVED. TMG078609	07-10-18	AW

Name: CIRCUIT DIAGRAM
CARRIER
M/L MARK VII

Atlas Copco
Transferred fr.

Scale: -
Fam.: .
3
Compare:
Drg.owner: TMG
Drawn: AVOAW
Replaces: .
Std.chd.:
Designation: 5112 0027 03
Sheet 10 (13)
Design chd.:
Prod.chd.:
Appd.: AW
Date: 07-01-22

This document is our property and shall not, without our permission be altered, copied, used for manufacturing or communicated to any other person or company.

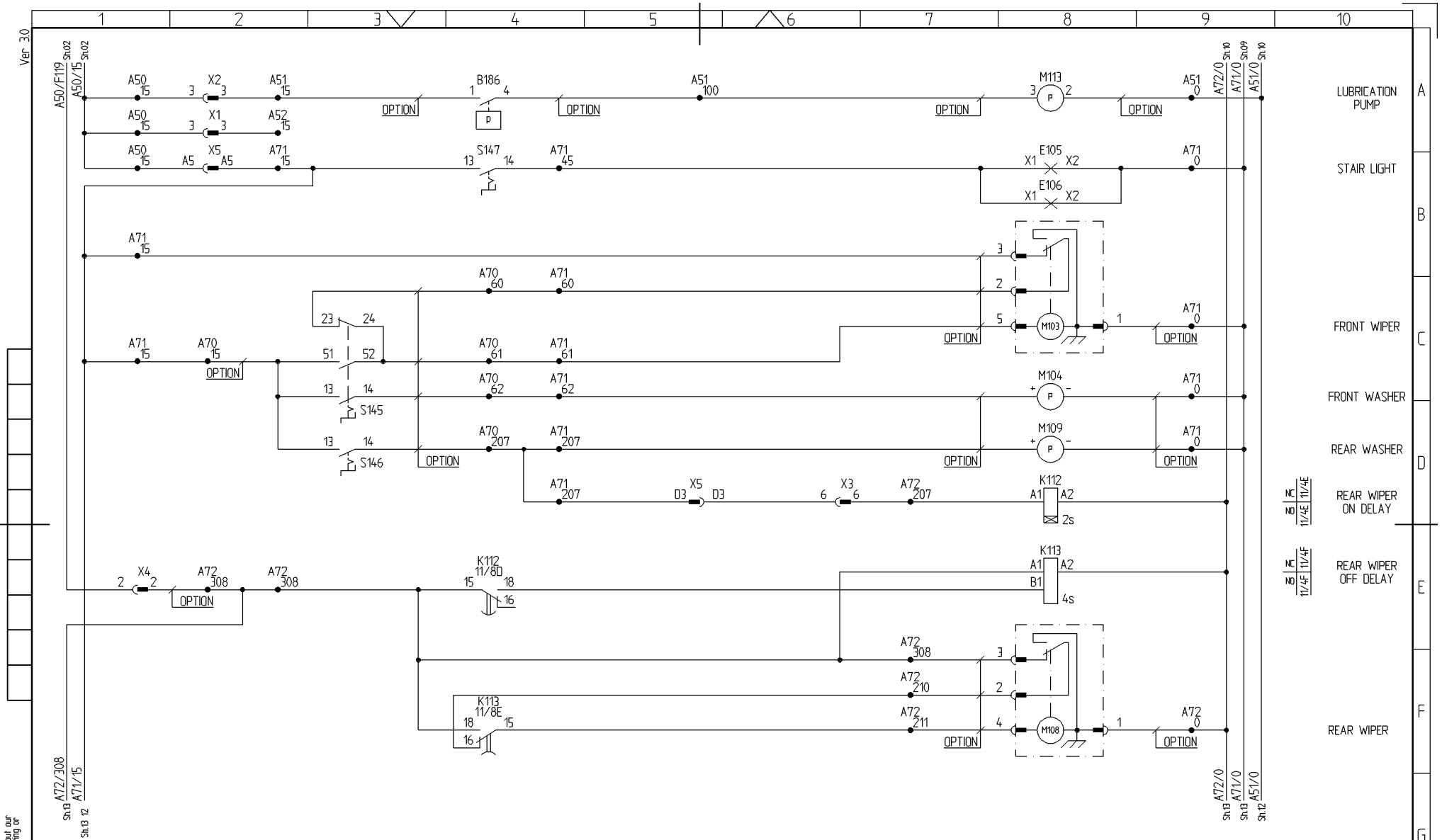

Note	Pos.	Modified from	Date	Sign.
4	SH.05	S305 ADJUSTED. TMG080951	07-12-19	AW
3	SH.02	F135 REPLACE F134. TMG080039	07-11-23	AW
2	SH.05	X139 ADJUSTED. TMG079367	07-11-06	AW
1	SH.04	B362 AND Y501 REMOVED. TMG078609	07-10-18	AW

Name: CIRCUIT DIAGRAM
CARRIER
M/L MARK VII

Atlas Copco

Transferred fr.

Scale: -
Fam.: .
3
Compare:
Drg.owner: TMG
Drawn: AVOAW
Replaces: .
Std.chd.:
Designation:
Sheet: 11 (13)
Design chd.:
Prod.chd.:
Appd.: AW
Date: 07-01-22
5112 0027 03

This document is our property and shall not, without our permission be altered, copied, used for manufacturing or communicated to any other person or company.

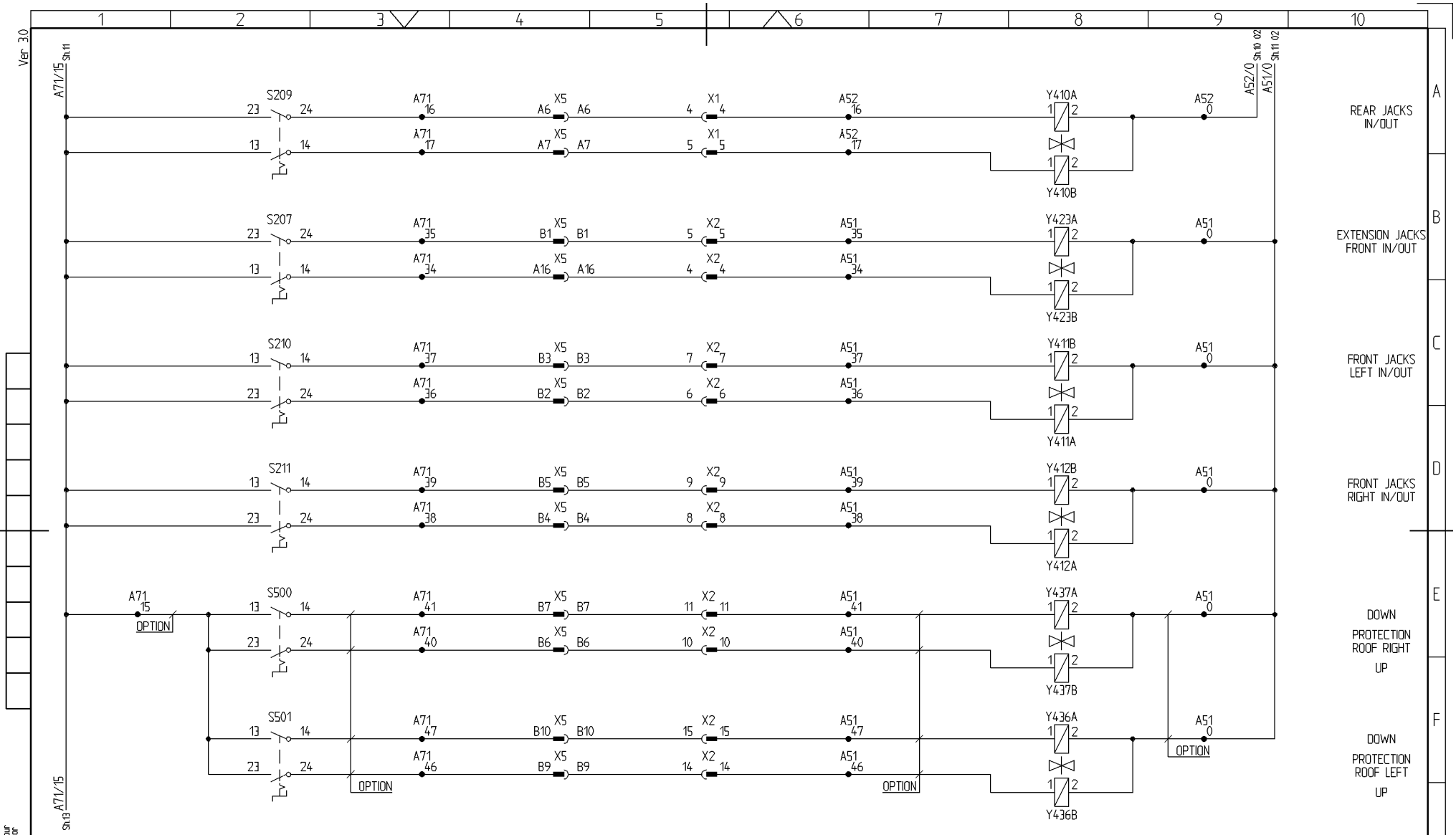

Note	Pos.	Modified from	Date	Sign.
4	SH.05	S305 ADJUSTED. TMG080951	07-12-19	AW
3	SH.02	F135 REPLACE F134. TMG080039	07-11-23	AW
2	SH.05	X139 ADJUSTED. TMG079367	07-11-06	AW
1	SH.04	B362 AND Y501 REMOVED. TMG078609	07-10-18	AW

Name: CIRCUIT DIAGRAM
CARRIER
M/L MARK VII

Atlas Copco

Transferred fr.

Scale: -
Fam.: .
3
Compare:
Drg.owner: TMG
Drawn: AVOAW
Replaces: .
Std.chd.: .
Designation: 5112 0027 03
Sheet 12 (13)
Design chd.: .
Prod.chd.: .
Appd.: AW
Date: 07-01-22

This document is our property and shall not, without our permission be altered, copied, used for manufacturing or communicated to any other person or company.

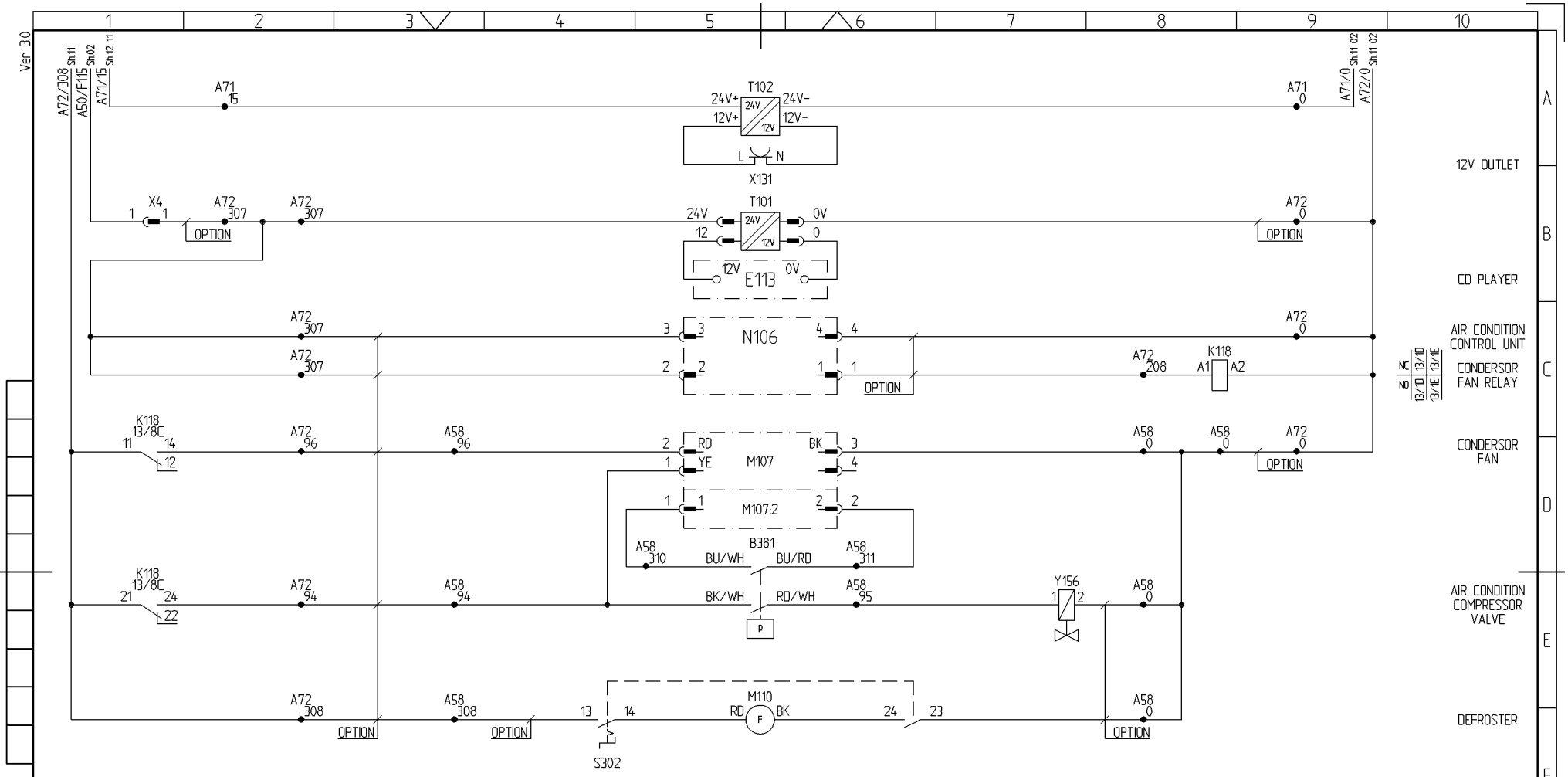

Note	Pos.	Modified from	Date	Sign.
4	SH.05	S305 ADJUSTED. TMG080951	07-12-19	AW
3	SH.02	F135 REPLACE F134. TMG080039	07-11-23	AW
2	SH.05	X139 ADJUSTED. TMG079367	07-11-06	AW
1	SH.04	B362 AND Y501 REMOVED. TMG078609	07-10-18	AW

Name: CIRCUIT DIAGRAM
CARRIER
M/L MARK VII

Atlas Copco

Transferred fr.

Scale: -
Fam.: 3
Compare:
Drg.owner: TMG
Drawn: AVOAW
Replaces:
Std.chd.:
Designation: 5112 0027 03
Sheet 13 (13)
Design chd.:
Prod.chd.:
Appd.: AW
Date: 07-01-22

This document is our property and shall not without our permission be altered, copied, used for manufacturing or communicated to any other person or company.

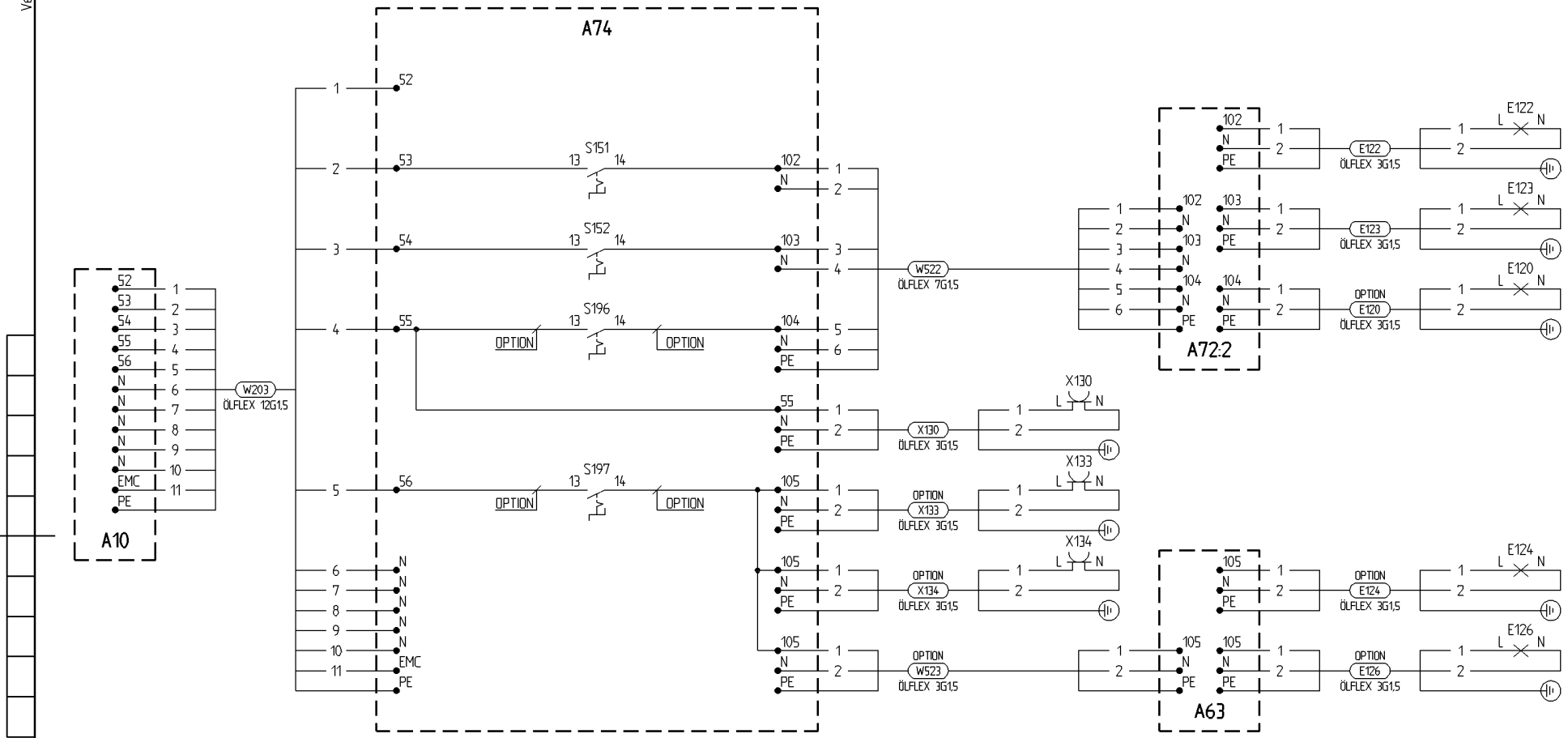

E120 CABIN LIGHT
E122 LEFT WORKINGLIGHT
E123 RIGHT WORKINGLIGHT
E124 EXTRA WORKING LIGHT
E126 EXTRA WORKING LIGHT
S151 WORKING LIGHT SWITCH
S152 WORKING LIGHT SWITCH
S196 CABIN LIGHT SWITCH
S197 EXTRA WORKING LIGHT SWITCH
X130 CABIN OUTLET
X133 EXTRA OUTLET WORKING LIGHT LEFT
X134 EXTRA OUTLET WORKING LIGHT RIGHT

Note	Pos.	Modified from	Date	Sign.

Name	CONNECTION DIAGRAM				
	PANEL A74 PROTECTION ROOF				
	M/L MARK VII				
Atlas Copco	Scale -	Fam. .	3	Compare	Drg.owner
Transferred fr.	Drawn AVOAW			Replaces .	TMG
.	Std.chd. .			Designation	Sheet 01(01)
	Design chd. .	Prod.chd. .	Appd. AW	Date 07-01-24	5112 0027 05

This document is our property and shall not, without our permission be altered, copied, used for manufacturing or communicated to any other person or company.

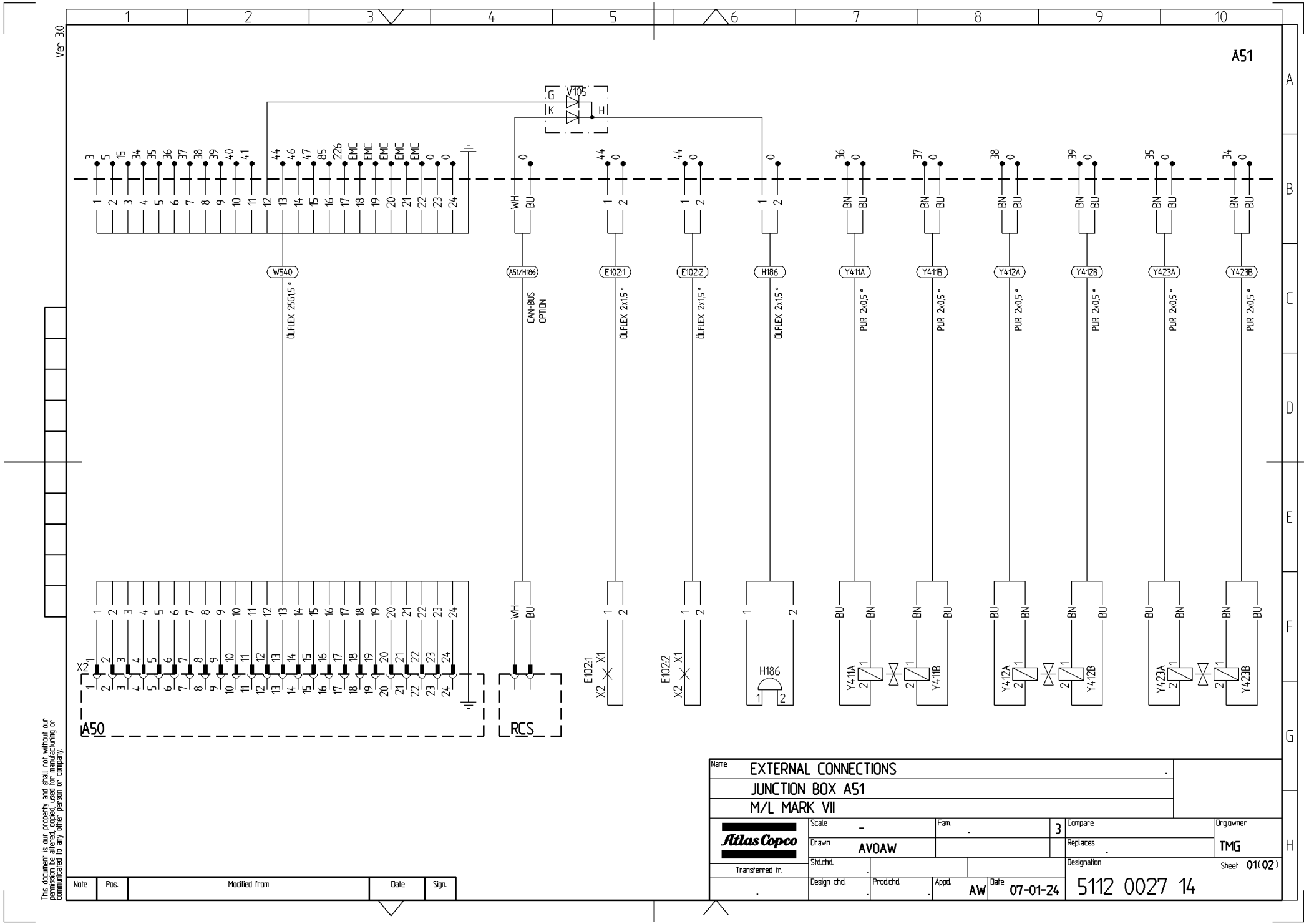
A51
Ver 30
V105
W540
A51/H186
E102:1
E102:2
H186
Y411A
Y411B
Y412A
Y412B
Y423A
Y423B
ÖLFLEX 25G1,5 °
CAN-BUS OPTION
ÖLFLEX 2x1,5 °
PUR 2x0,5 °
A50
RCS
EXTERNAL CONNECTIONS
JUNCTION BOX A51
M/L MARK VII
Atlas Copco
Transferred fr.
Scale -
Fam.
Drawn AVOAW
Std.chd.
Design chd.
Prod.chd.
Appd. AW
Date 07-01-24
Compare
Replaces
Drg.owner TMG
Designation 5112 0027 14
Sheet 01(02)
Note
Pos.
Modified from
Date
Sign.
This document is our property and shall not, without our permission be altered, copied, used for manufacturing or communicated to any other person or company.

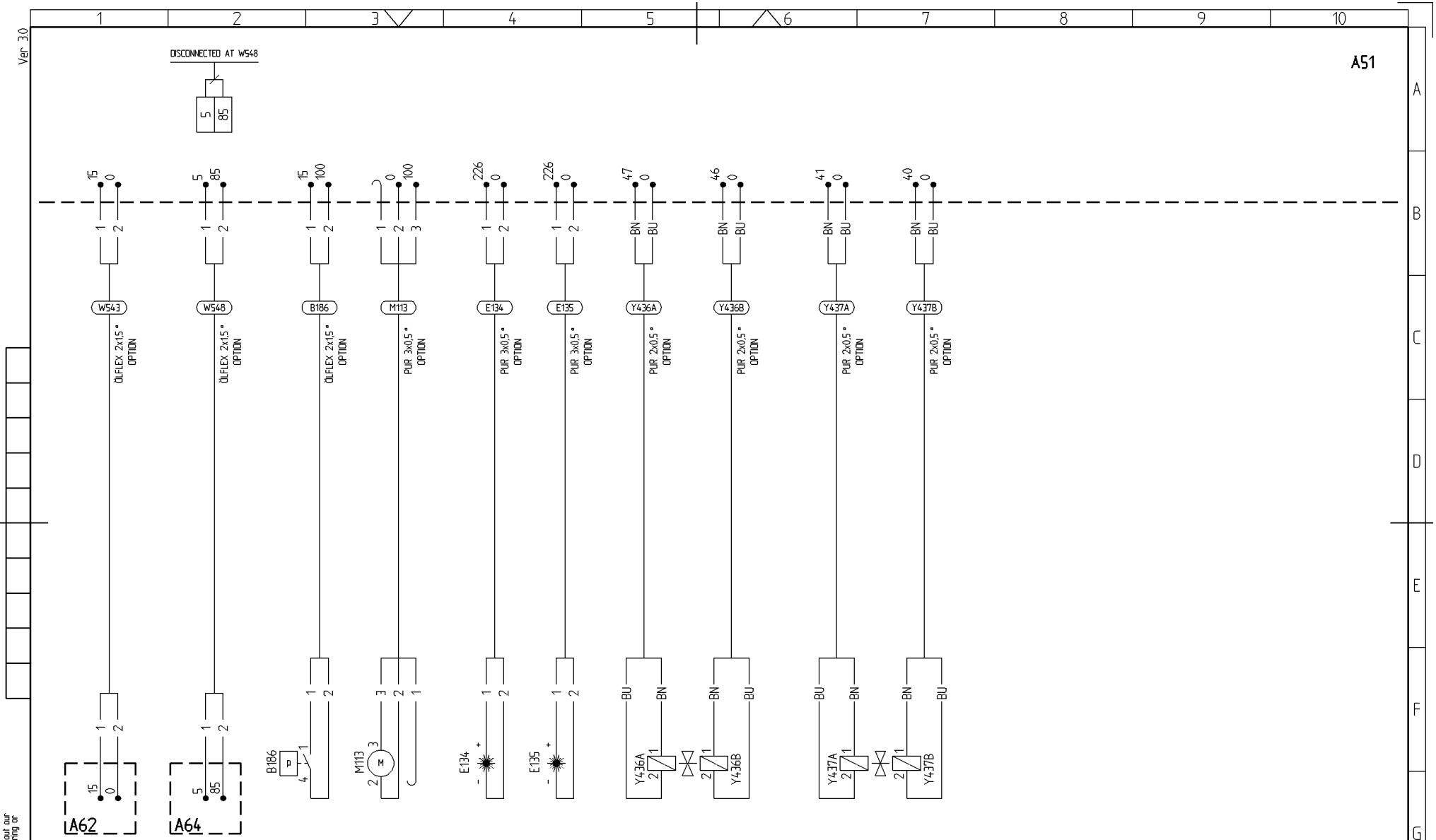

This document is our property and shall not, without our permission be altered, copied, used for manufacturing or communicated to any other person or company.

Note	Pos.	Modified from	Date	Sign.

Name	EXTERNAL CONNECTIONS				
	JUNCTION BOX A51				
	M/L MARK VII				
Atlas Copco	Scale -	Fam. .	3	Compare	Drg.owner
	Drawn AVOAW			Replaces .	TMG
Transferred fr.	Std.chd. .			Designation	Sheet 02(02)
.	Design chd. .	Prod.chd. .	Appd. AW	Date 07-01-24	5112 0027 14

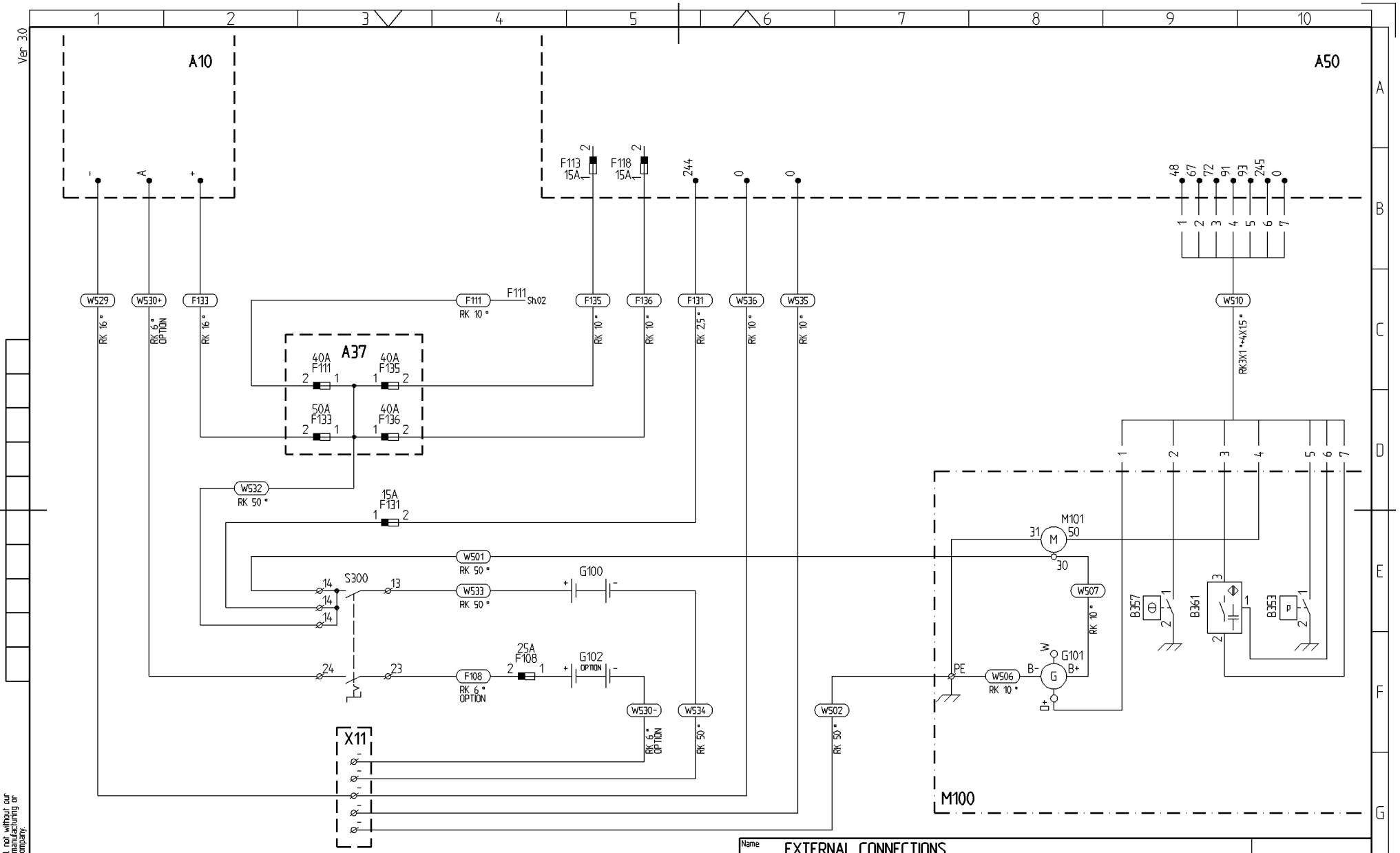

4	SH.01	TMG087051	08-06-23	AW
Note	Pos.	Modified from	Date	Sign.

This document is our property and shall not, without our permission be altered, copied, used for manufacturing or communicated to any other person or company.

Name: EXTERNAL CONNECTIONS
APPARATUS BOX A50/BATTERY PACK
M/L MARK VII

Atlas Copco

Transferred fr.

Scale -	Fam. .	3	Compare	Drg.owner	
Drawn AVOAW			Replaces .	TMG	
Std.chd. .			Designation	Sheet 01(03)	
Design chd. .	Prod.chd. .	Appd. AW	Date 07-01-26	5112 0027 18	

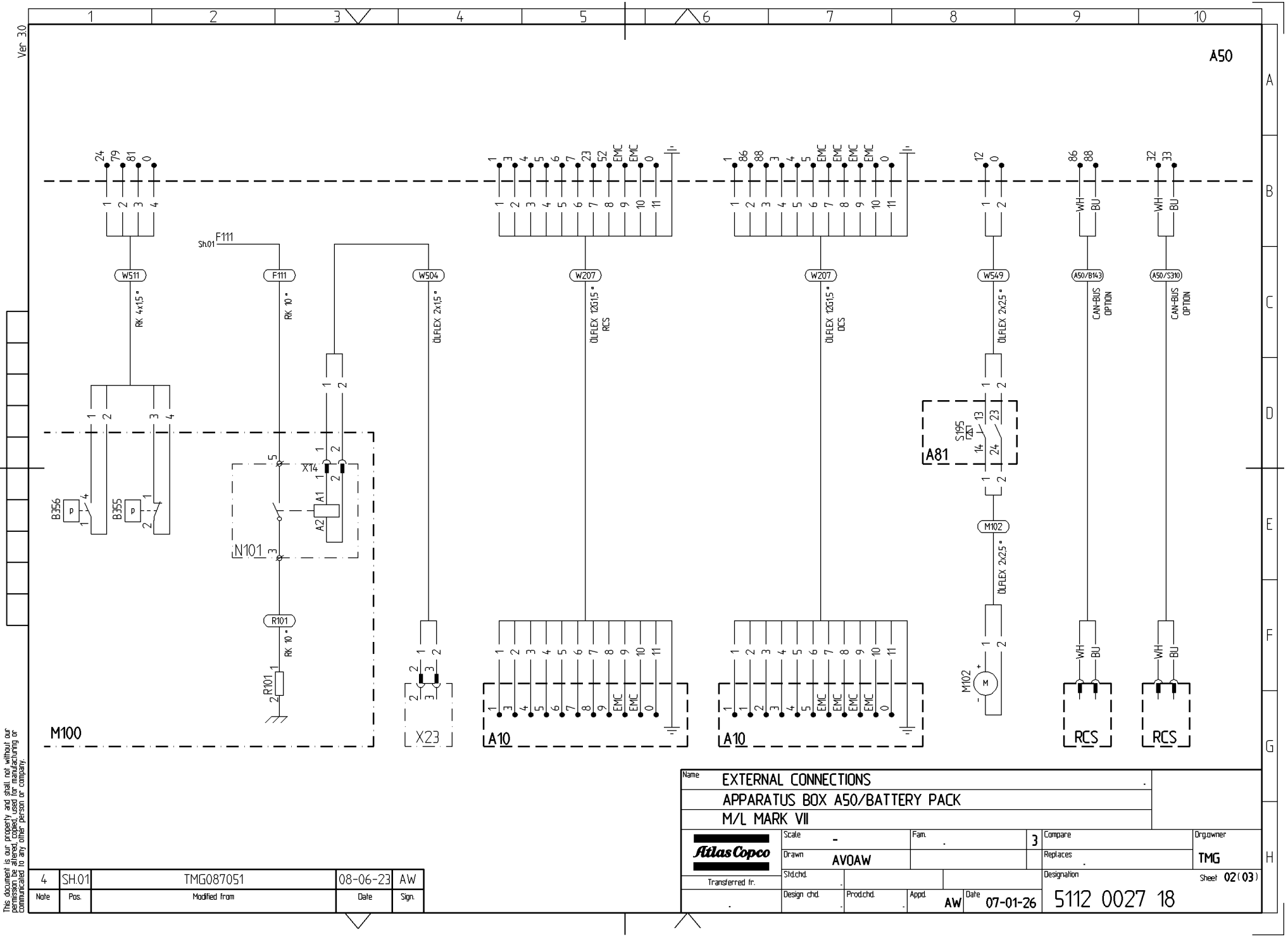
Ver 30
A50
F111
Sh.01
W511
RK 4x1.5 °
F111
RK 10 °
W504
ÖLFLEX 2x1.5 °
W207
ÖLFLEX 12G1.5 °
RCS
W207
ÖLFLEX 12G1.5 °
DCS
W549
ÖLFLEX 2x2.5 °
A50/B143
CAN-BUS OPTION
A50/S310
CAN-BUS OPTION
B356
B355
X14
A1
A2
N101
R101
RK 10 °
R101
M100
X23
A10
A10
A81
S195
M102
ÖLFLEX 2x2.5 °
M102
RCS
RCS
This document is our property and shall not, without our permission be altered, copied, used for manufacturing or communicated to any other person or company.
4 | SH.01 | TMG087051 | 08-06-23 | AW
Note | Pos. | Modified from | Date | Sign.
Name EXTERNAL CONNECTIONS
APPARATUS BOX A50/BATTERY PACK
M/L MARK VII
Atlas Copco
Transferred fr.
Scale -
Fam.
3
Compare
Drg.owner
TMG
Drawn AVOAW
Replaces
Std.chd.
Designation
Sheet 02(03)
Design chd.
Prod.chd.
Appd. AW
Date 07-01-26
5112 0027 18

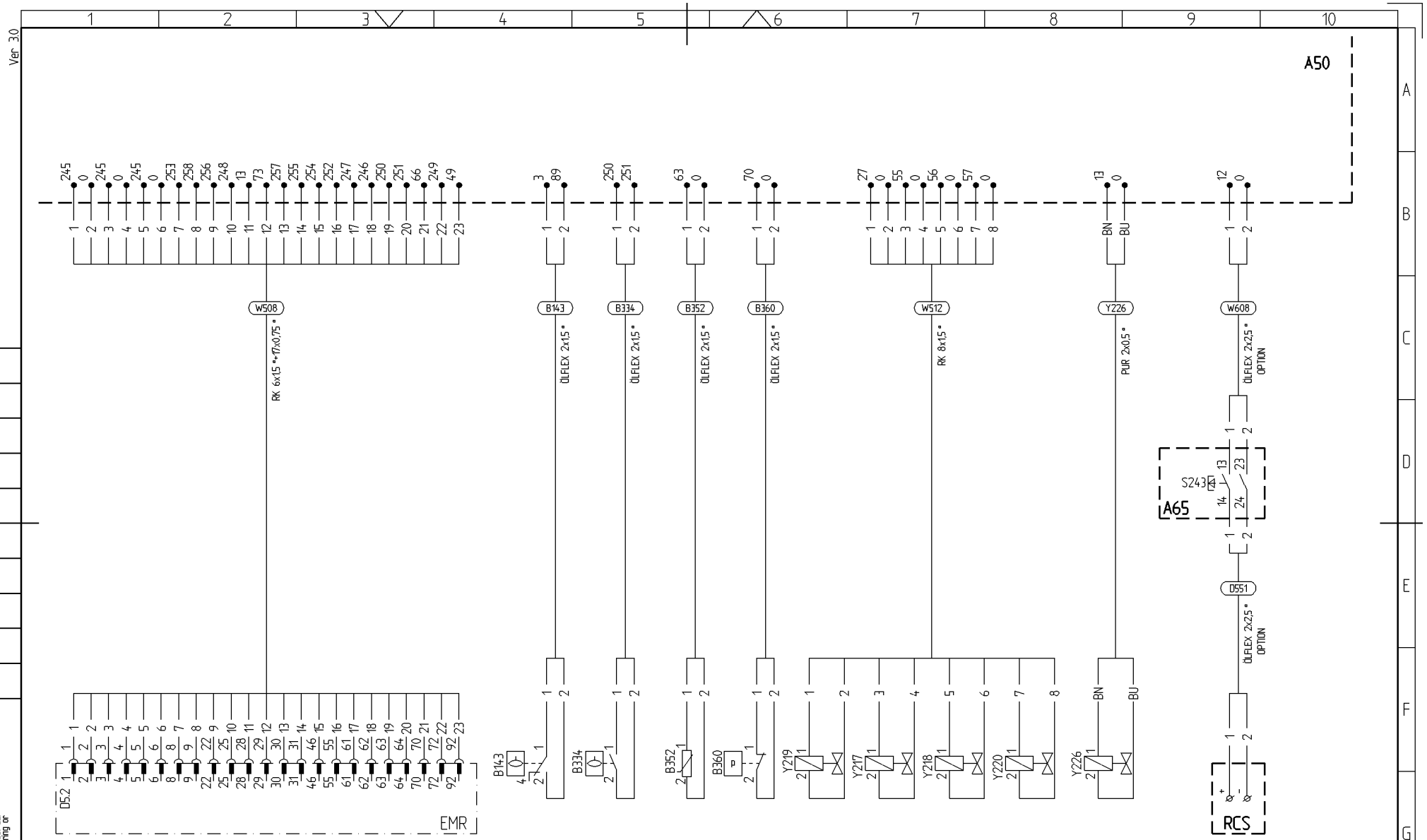

This document is our property and shall not without our permission be altered, copied, used for manufacturing or communicated to any other person or company.

Name	EXTERNAL CONNECTIONS				
	APPARATUS BOX A50/BATTERY PACK				
	M/L MARK VII				
Atlas Copco	Scale -	Fam. .	3	Compare	Drg.owner
Transferred fr.	Drawn AVOAW			Replaces .	TMG
.	Std.chd. .			Designation	Sheet 03(03)
	Design chd. .	Prod.chd. .	Appd. AW	Date 07-01-26	5112 0027 18

Note	Pos.	Modified from	Date	Sign.
4	SH.01	TMG087051	08-06-23	AW

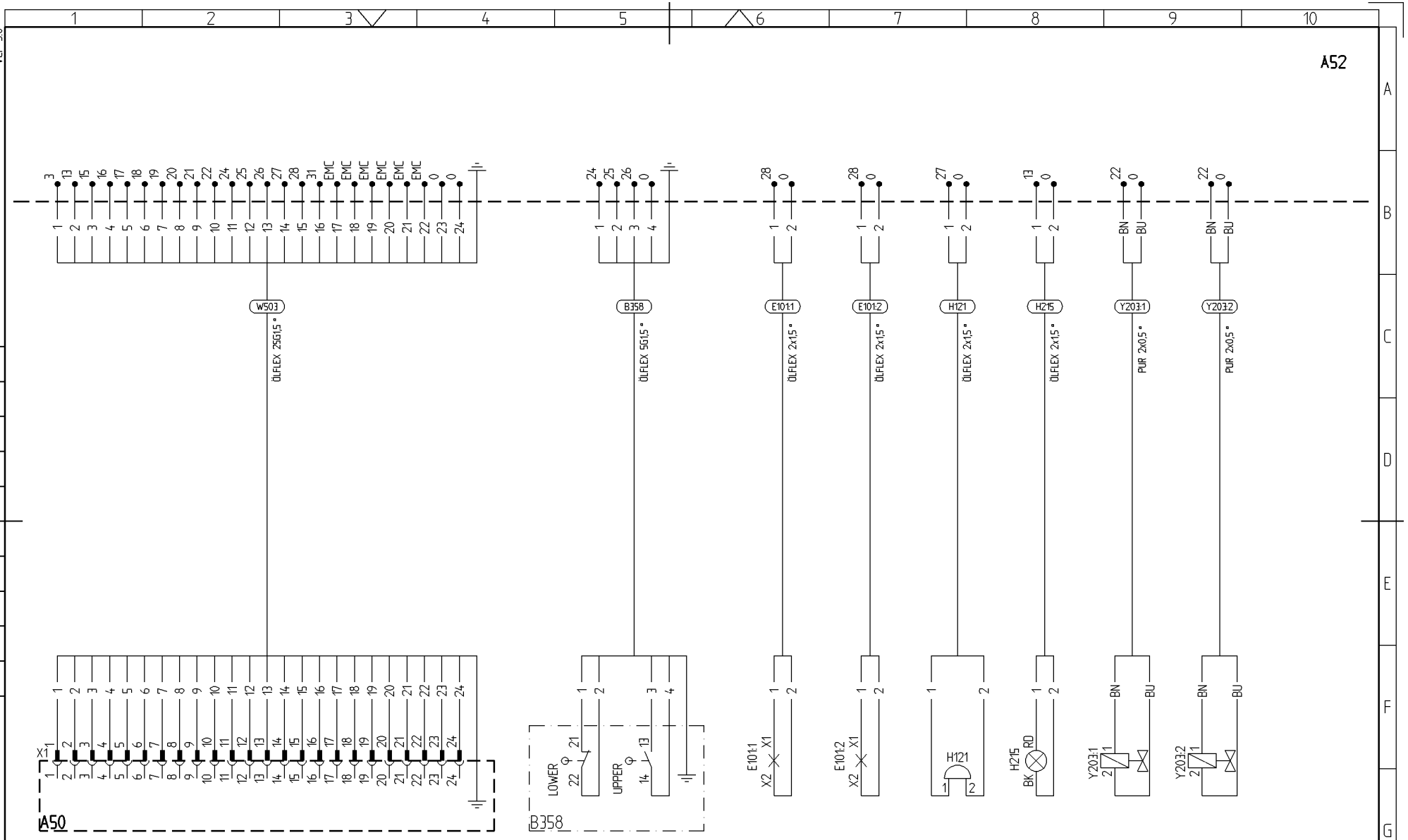

This document is our property and shall not, without our permission be altered, copied, used for manufacturing or communicated to any other person or company.

Note	Pos.	Modified from	Date	Sign.
1	SH.02	B362 AND Y501 REMOVED. TMG078609	07-10-18	AW

Name: EXTERNAL CONNECTIONS
JUNCTION BOX A52
M/L MARK VII

Atlas Copco
Transferred fr.

Scale: -	Fam. .	3	Compare	Drg.owner: TMG
Drawn: AVOAW			Replaces .	
Std.chd. .			Designation: 5112 0027 23	Sheet: 01(02)
Design chd. .	Prod.chd. .	Appd. AW	Date 07-02-02	

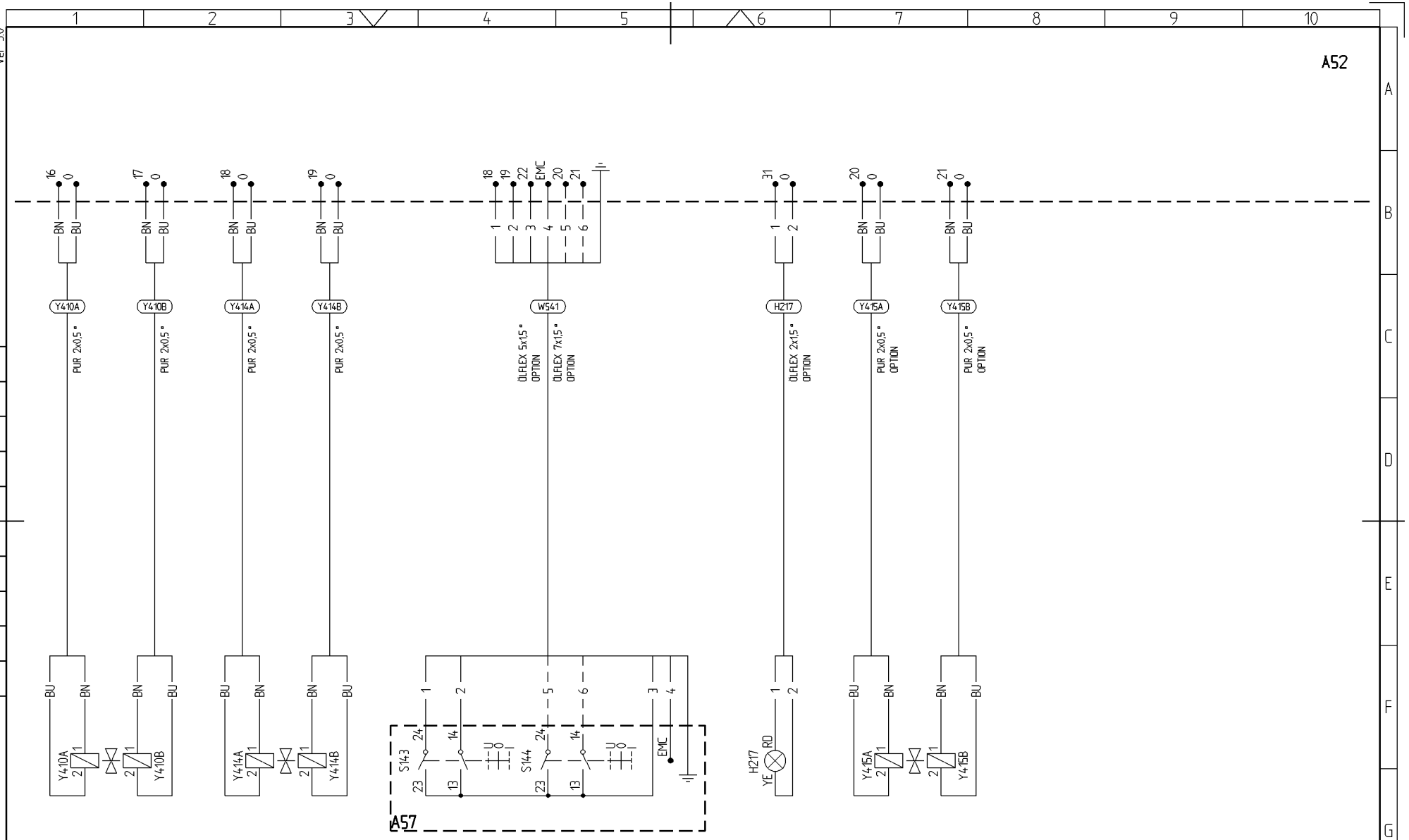

Name	EXTERNAL CONNECTIONS				
	JUNCTION BOX A52				
	M/L MARK VII				
Atlas Copco	Scale -	Fam. .	3	Compare	Drg.owner
	Drawn AVOAW			Replaces .	TMG
Transferred fr.	Std.chd. .			Designation	Sheet 02(02)
.	Design chd. .	Prod.chd. .	Appd. AW	Date 07-02-02	5112 0027 23

Note	Pos.	Modified from	Date	Sign.
1	SH.02	B362 AND Y501 REMOVED. TMG078609	07-10-18	AW

This document is our property and shall not, without our permission be altered, copied, used for manufacturing or communicated to any other person or company.

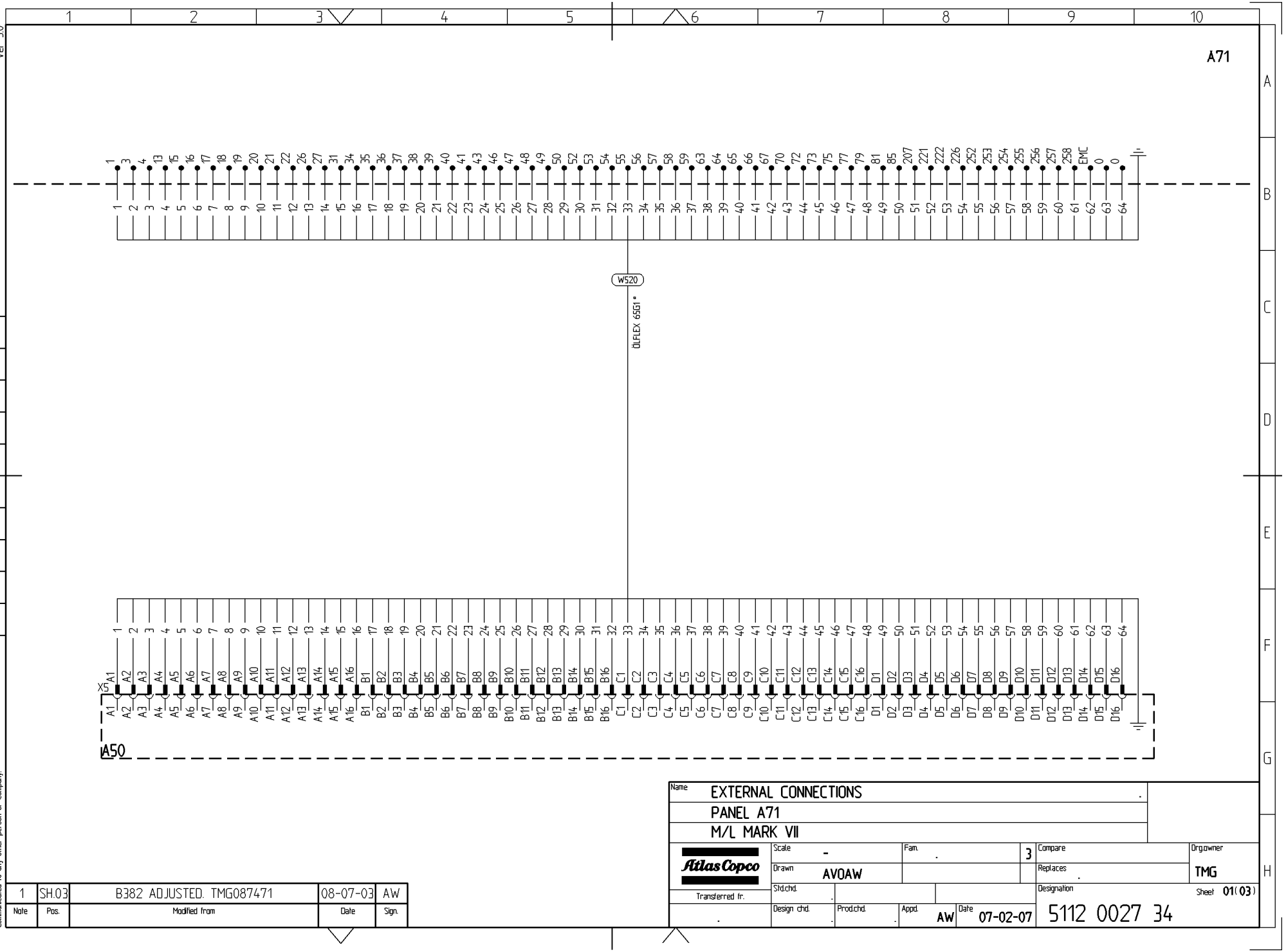
Ver 30
A71
W520
ÖLFLEX 6561 *
X5
A50
EXTERNAL CONNECTIONS
PANEL A71
M/L MARK VII
Atlas Copco
Transferred fr.
Scale -
Fam.
3
Compare
Drg.owner
Drawn AVOAW
Replaces
TMG
Std.chd.
Designation
Sheet 01(03)
Design chd.
Prod.chd.
Appd. AW
Date 07-02-07
5112 0027 34
1 | SH.03 | B382 ADJUSTED. TMG087471 | 08-07-03 | AW
Note | Pos. | Modified from | Date | Sign.
This document is our property and shall not, without our permission be altered, copied, used for manufacturing or communicated to any other person or company.

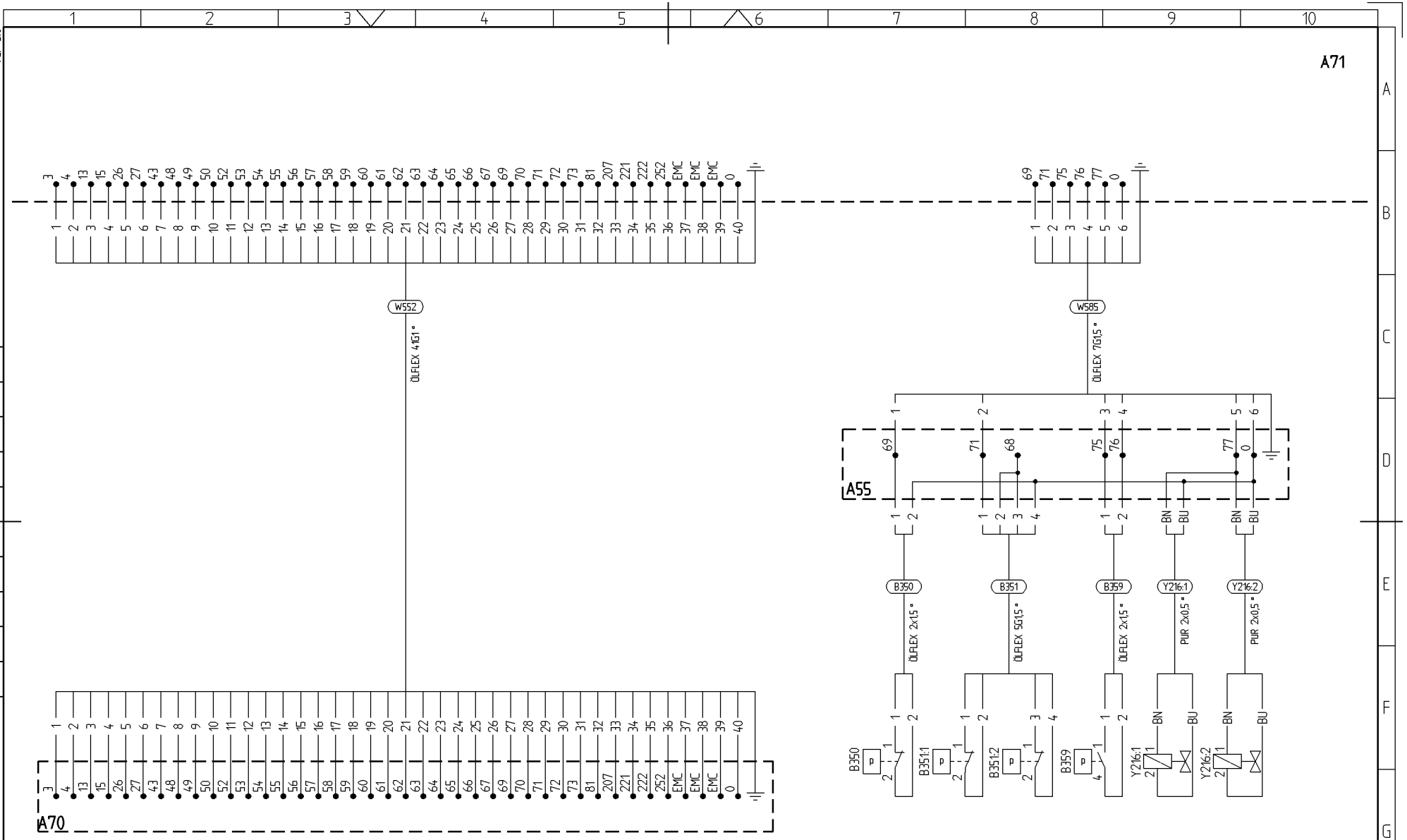

Name	EXTERNAL CONNECTIONS				
	PANEL A71				
	M/L MARK VII				
Atlas Copco	Scale -	Fam. .	3	Compare	Drg.owner
Transferred fr.	Drawn AVOAW			Replaces .	TMG
.	Std.chd. .			Designation	Sheet 02(03)
	Design chd. .	Prod.chd. .	Appd. AW	Date 07-02-07	5112 0027 34

Note	Pos.	Modified from	Date	Sign.
1	SH.03	B382 ADJUSTED. TMG087471	08-07-03	AW

This document is our property and shall not, without our permission be altered, copied, used for manufacturing or communicated to any other person or company.

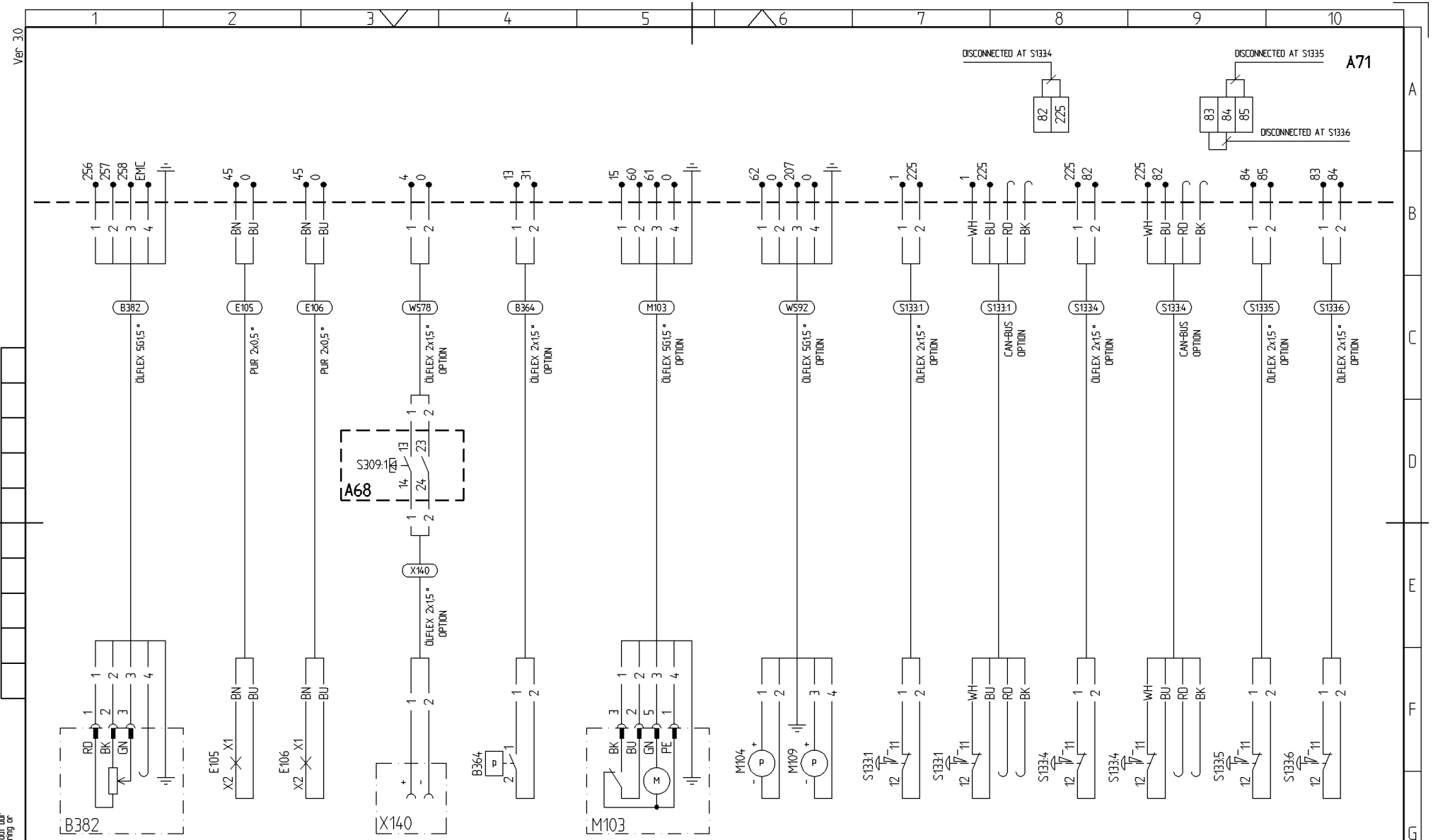

Name	EXTERNAL CONNECTIONS				
	PANEL A71				
	M/L MARK VII				
Atlas Copco	Scale -	Fam. .	3	Compare	Drg.owner
Transferred fr. .	Drawn AVOAW			Replaces .	TMG
	Std.chd. .			Designation	Sheet 03(03)
	Design chd. .	Prod.chd. .	Appd. AW	Date 07-02-07	5112 0027 34

Note	Pos.	Modified from	Date	Sign.
1	SH.03	B382 ADJUSTED. TMG087471	08-07-03	AW

This document is our property and shall not, without our permission be altered, copied, used for manufacturing or communicated to any other person or company.

Ver 30

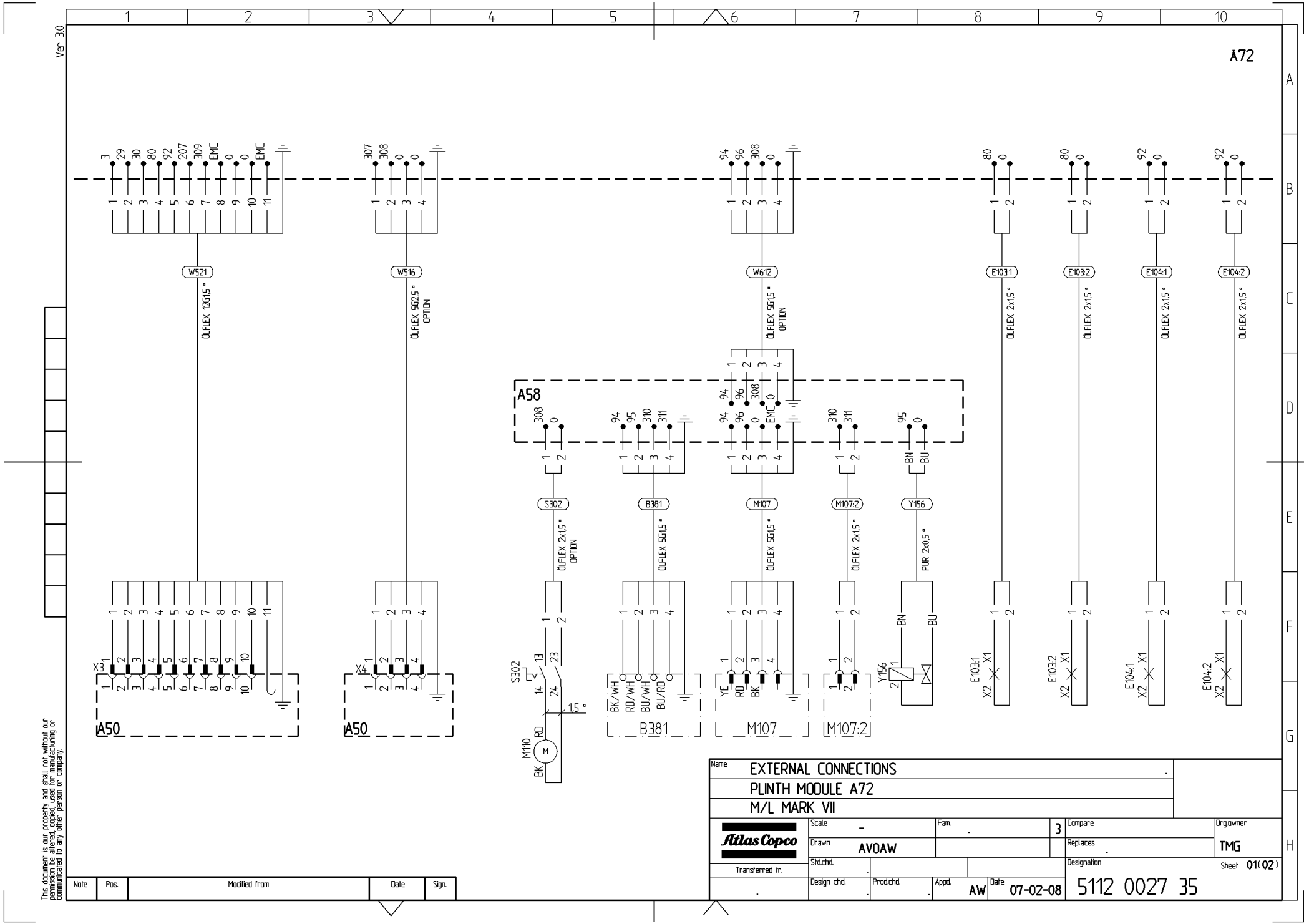
Ver 30
A72
W521
ÖLFLEX 12G1,5 °
W516
ÖLFLEX 5G2,5 °
OPTION
W612
ÖLFLEX 5G1,5 °
OPTION
E103:1
E103:2
E104:1
E104:2
ÖLFLEX 2x1,5 °
A58
S302
B381
M107
M107:2
Y156
ÖLFLEX 2x1,5 °
OPTION
ÖLFLEX 5G1,5 °
ÖLFLEX 2x1,5 °
PUR 2x0,5 °
M110
1,5 °
X3
X4
A50
A50
B381
M107
M107:2
EXTERNAL CONNECTIONS
PLINTH MODULE A72
M/L MARK VII
Atlas Copco
Transferred fr.
Scale -
Fam.
Drawn AVOAW
Std.chd.
Design chd.
Prod.chd.
Appd. AW
Date 07-02-08
3
Compare
Replaces
Drg.owner TMG
Designation 5112 0027 35
Sheet 01(02)
Note
Pos.
Modified from
Date
Sign.
This document is our property and shall not, without our permission be altered, copied, used for manufacturing or communicated to any other person or company.

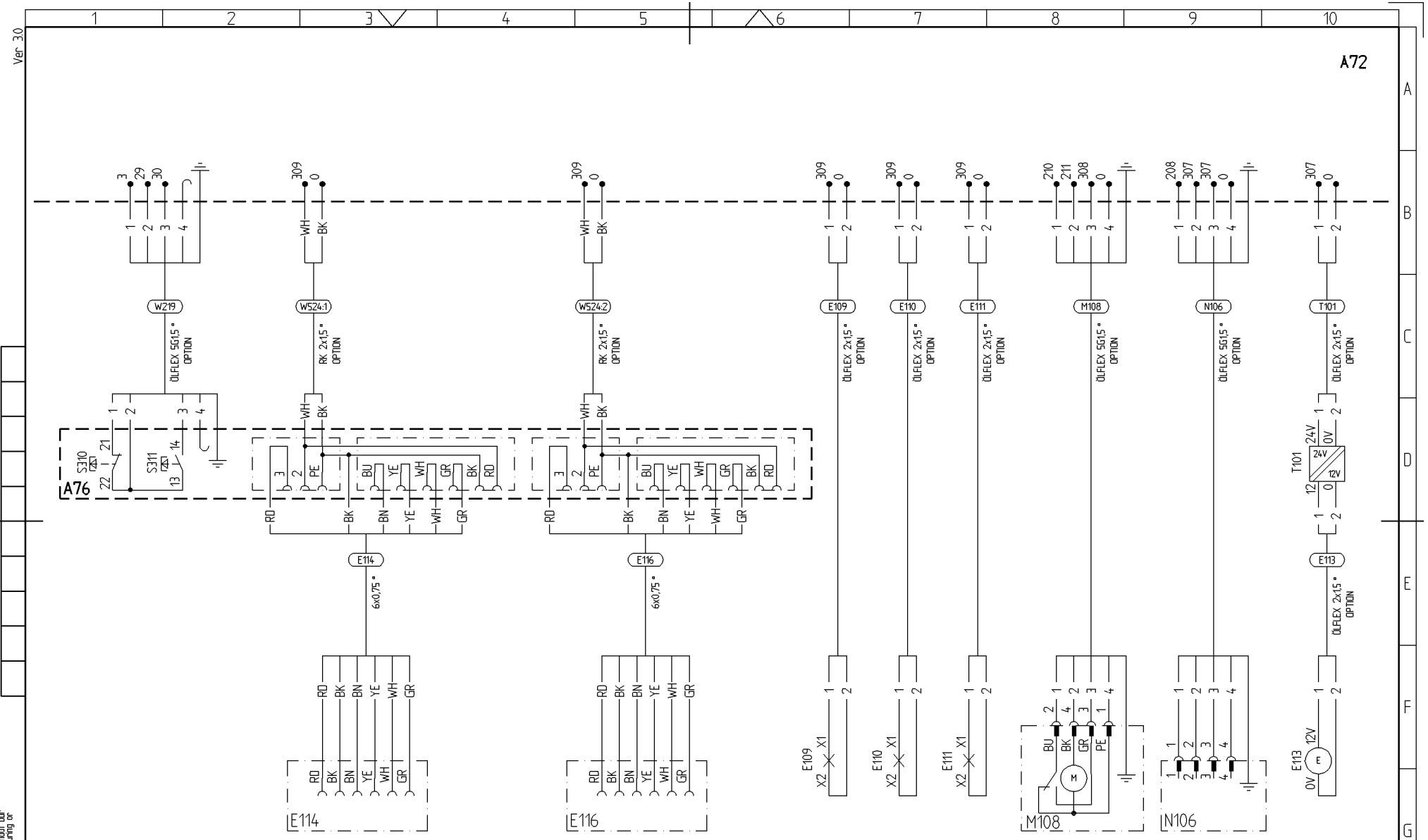

Name	EXTERNAL CONNECTIONS				
	PLINTH MODULE A72				
	M/L MARK VII				
Atlas Copco	Scale -	Fam. .	3	Compare	Drg.owner
	Drawn AVOAW			Replaces .	TMG
Transferred fr.	Std.chd. .			Designation	Sheet 02(02)
.	Design chd. .	Prod.chd. .	Appd. AW	Date 07-02-08	5112 0027 35

Note	Pos.	Modified from	Date	Sign.

This document is our property and shall not, without our permission be altered, copied, used for manufacturing or communicated to any other person or company.

Ver 30

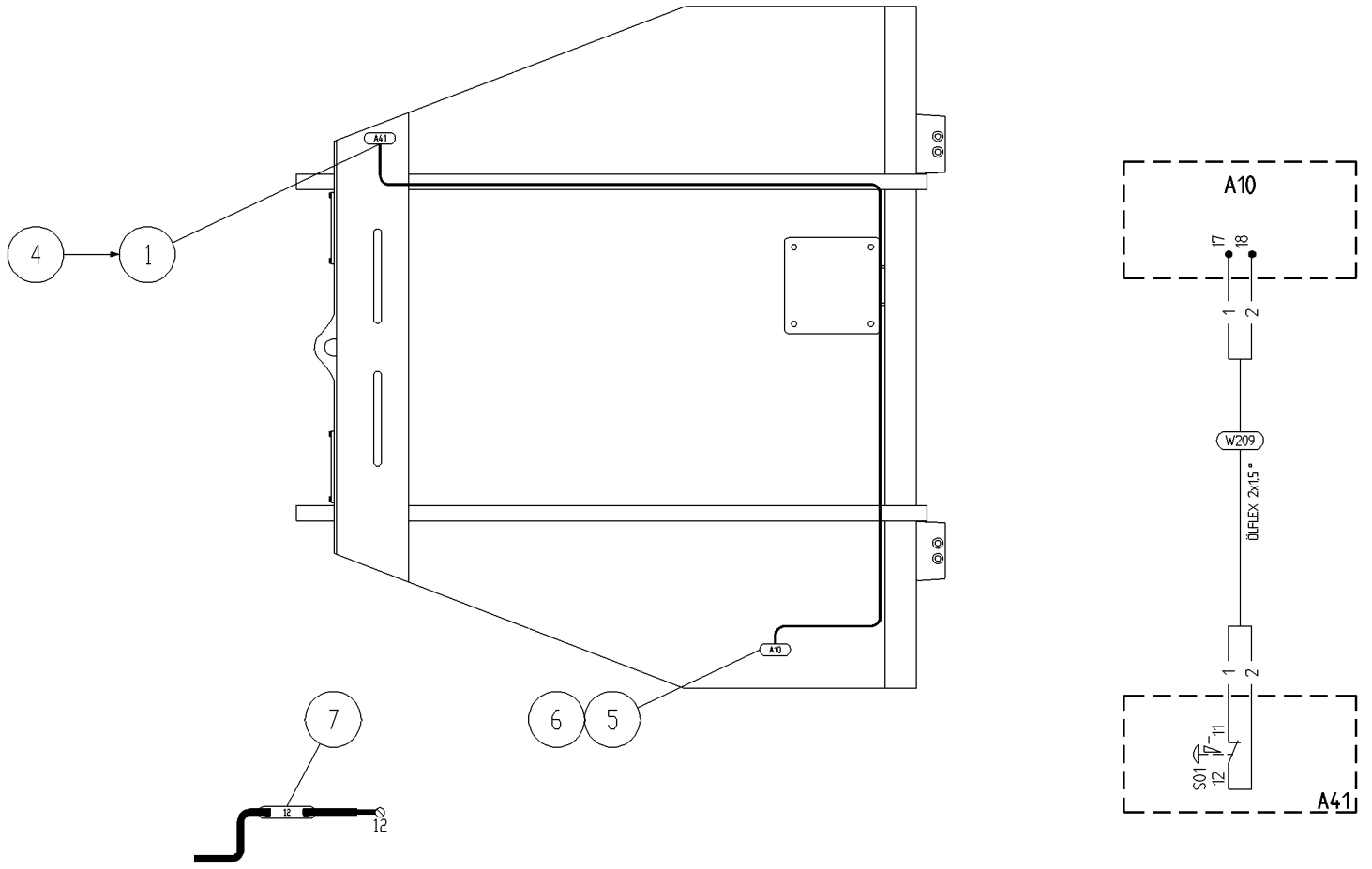

3	·	TMG084517	08-04-08	AW
2	·	TMG082876	08-02-20	AW
1	·	TMG077068	07-09-03	AW
Note	Pos.	Modified from	Date	Sign.

Name COMPONENT LAYOUT

EMERGENCY SET A41

STRUKTUR: 5112 0029 23

Atlas Copco

Transferred fr.

Scale 1:15	Fam. .	3	Compare	Drg.owner TMG
Drawn AVOAW			Replaces .	
Std.chd. .			Designation 5112 0029 24	Sheet 01(01)
Design chd. .	Prod.chd. .	Appd. AW	Date 07-03-07	

This document is our property and shall not, without our permission be altered, copied, used for manufacturing or communicated to any other person or company.

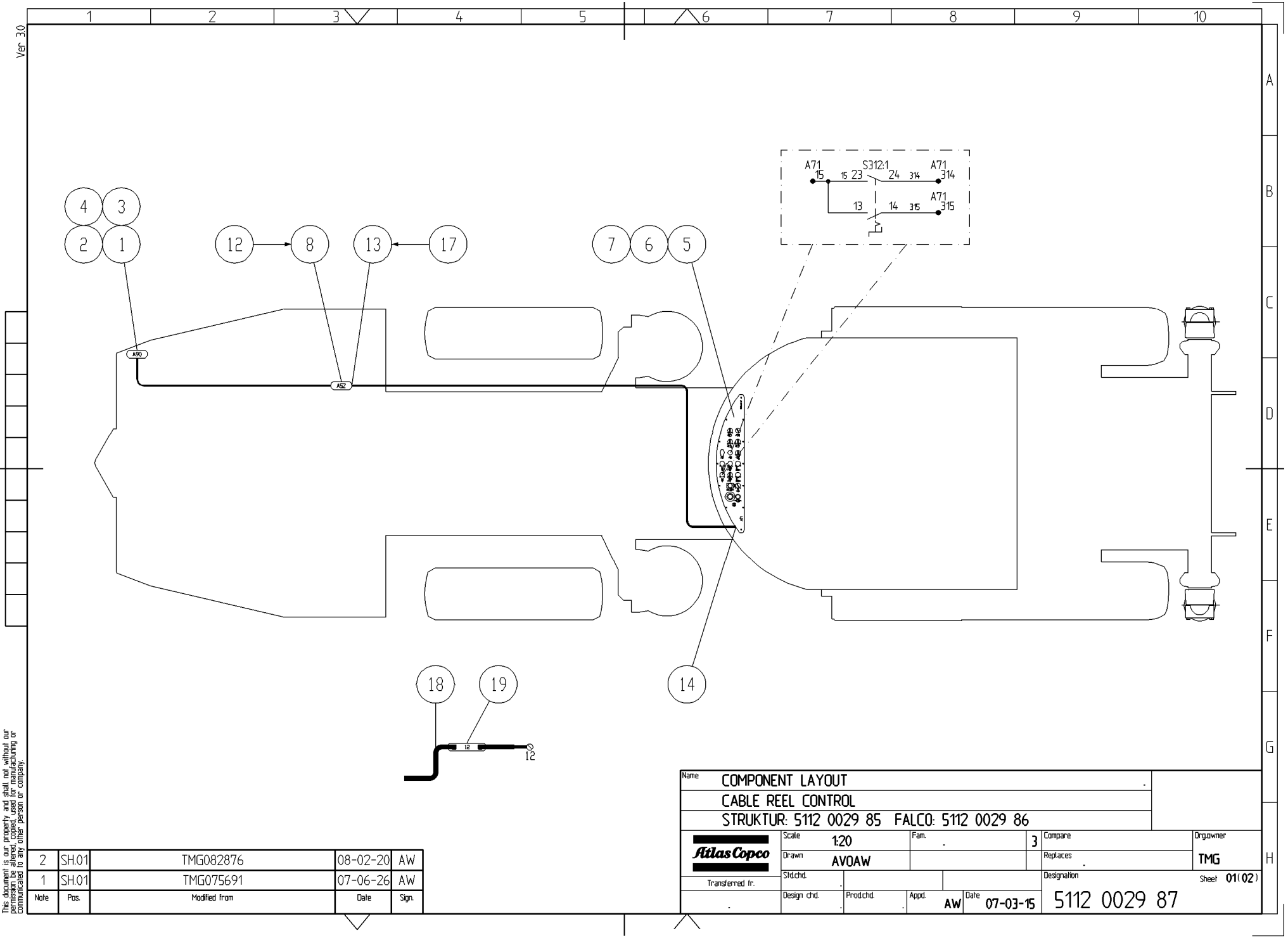

This document is our property and shall not, without our permission be altered, copied, used for manufacturing or communicated to any other person or company.

Note	Pos.	Modified from	Date	Sign.
2	SH.01	TMG082876	08-02-20	AW
1	SH.01	TMG075691	07-06-26	AW

Name: COMPONENT LAYOUT
CABLE REEL CONTROL
STRUKTUR: 5112 0029 85 FALCO: 5112 0029 86

Atlas Copco
Transferred fr.

Scale 1:20	Fam. .	3	Compare	Drg.owner TMG
Drawn AVOAW			Replaces .	
Std.chd. .			Designation 5112 0029 87	Sheet 01(02)
Design chd. .	Prod.chd. .	Appd. AW	Date 07-03-15	

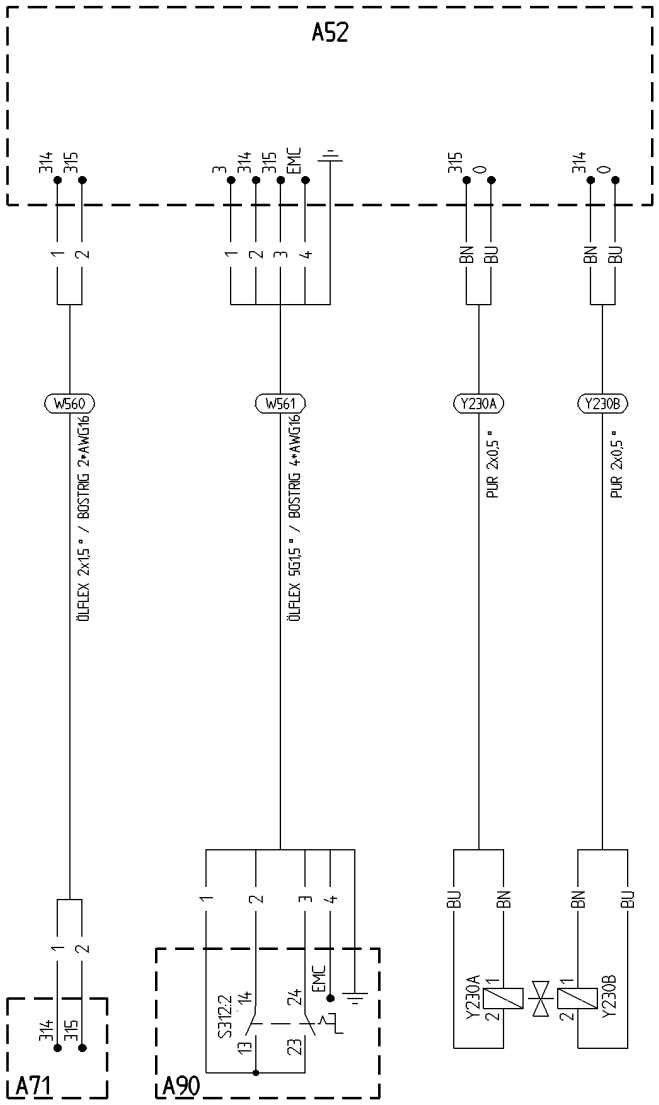

Name	CONNECTIONS DIAGRAM				
	CABLE REEL CONTROL				
	STRUKTUR: 5112 0029 85 FALCO: 5112 0029 86				
Atlas Copco	Scale -	Fam. .	3	Compare	Drg.owner
	Drawn AVOAW			Replaces .	TMG
Transferred fr.	Std.chd. .			Designation	Sheet 02(02)
.	Design chd. .	Prod.chd. .	Appd. AW	Date 07-03-15	5112 0029 87

Note	Pos.	Modified from	Date	Sign.
2	SH.01	TMG082876	08-02-20	AW
1	SH.01	TMG075691	07-06-26	AW

This document is our property and shall not, without our permission be altered, copied, used for manufacturing or communicated to any other person or company.

Ver 30

Note	Modified from	Date	Intr.	Note	Modified from	Date	Intr.
1	5112 3135 26 ADDED.	010404	AW	2	5112 3178 92 ADDED	020723	RN
3	SHRINKING TUBE ADJUSTED (TMG067612)	061003	RN	4	3 NYA KABLAR (TMG082714)	080226	RN

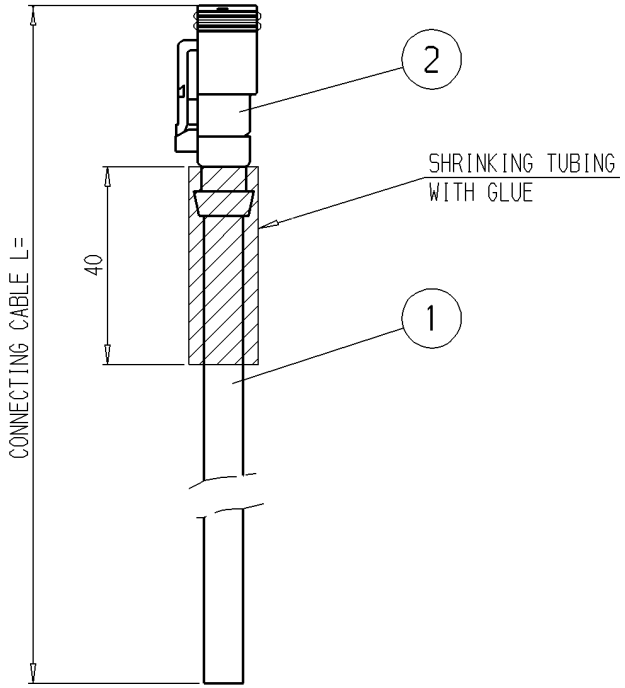

COONECTING CABLE	1000mm	5112 3134 80
COONECTING CABLE	3000mm	5112 3134 77
COONECTING CABLE	5000mm	5112 3134 78
COONECTING CABLE	7000mm	5112 3135 26
COONECTING CABLE	10000mm	5112 3178 92
COONECTING CABLE	3000mm	5112 0104 71 180 C°
COONECTING CABLE	7000mm	5112 0104 74 180 C°
COONECTING CABLE	10000mm	5112 0104 73 180 C°

Pos.	Designation	Number	Name	Material

Tolerances, if not indicated, according to:
ATLAS COPCO STANDARD / Class

Machined surfaces
1350 K / .

Name: ANSLUTNINGSKABEL/CONNECTING CABLE DT06-25-E008
Material: NORDIC LIGHT 100/200
Secrecy class: 1102 K/ .
CAD

Scale: 1:1
Drawn: AVOAW
Fam: .
Blank: .
4
Compare: .
Replaces: .
Drg.owner: TMG
Transferred from: .
Blk.wt.: . kg
Fin.wt.: kg
Appd.: RN
Date: 98-11-03
Designation: 5112 3134 79
Sheet 1 (1)

This document is our property and shall not without our permission be altered, copied, used for manufacturing or communicated to any other person or company.

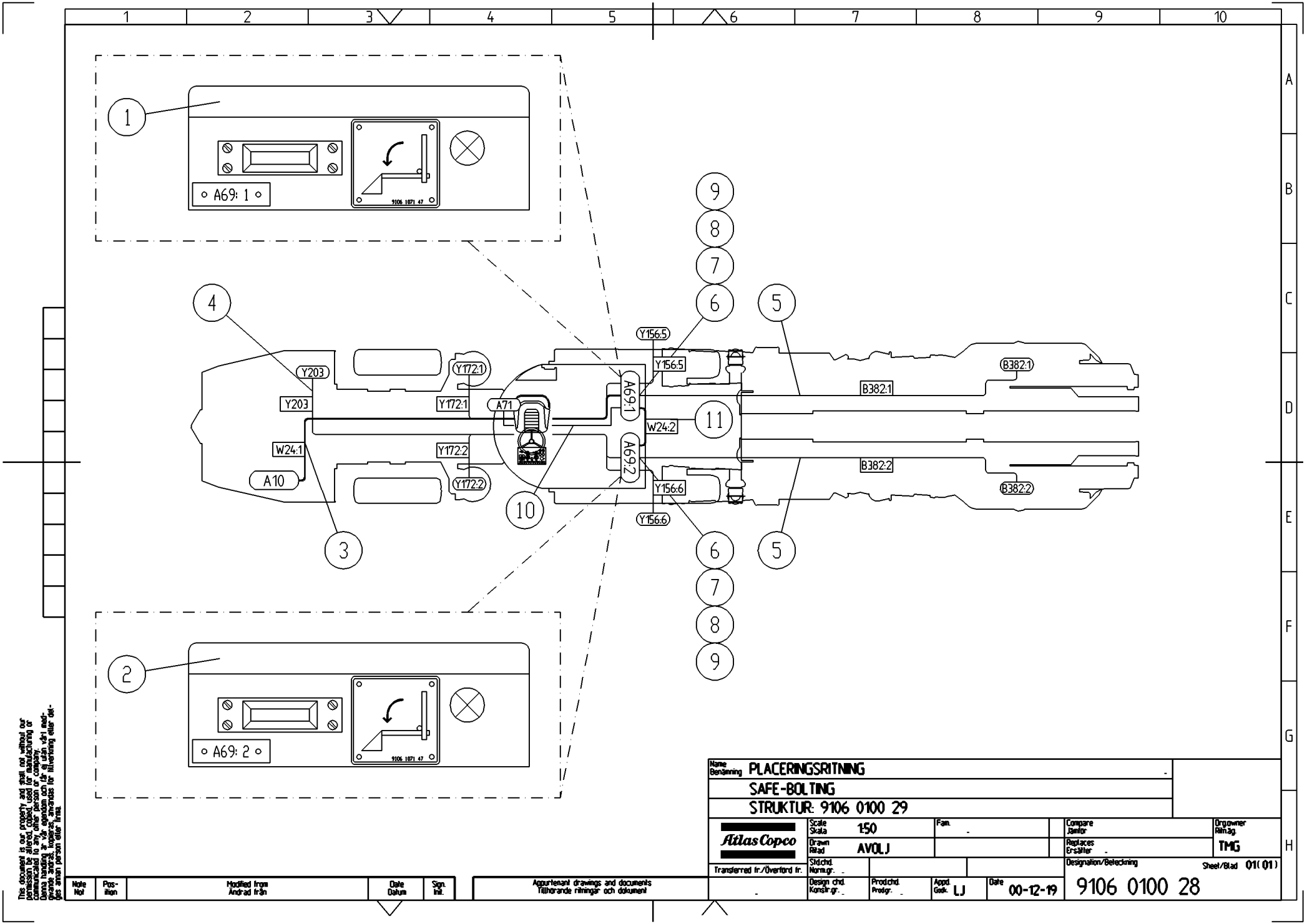

This document is our property and shall not without our permission be altered, copied, used for manufacturing or communicated to any other person or company. Denna handling är vår egendom och får ej utan vårt medgivande ändras, kopieras, användas för tillverkning eller delges annan person eller firma.

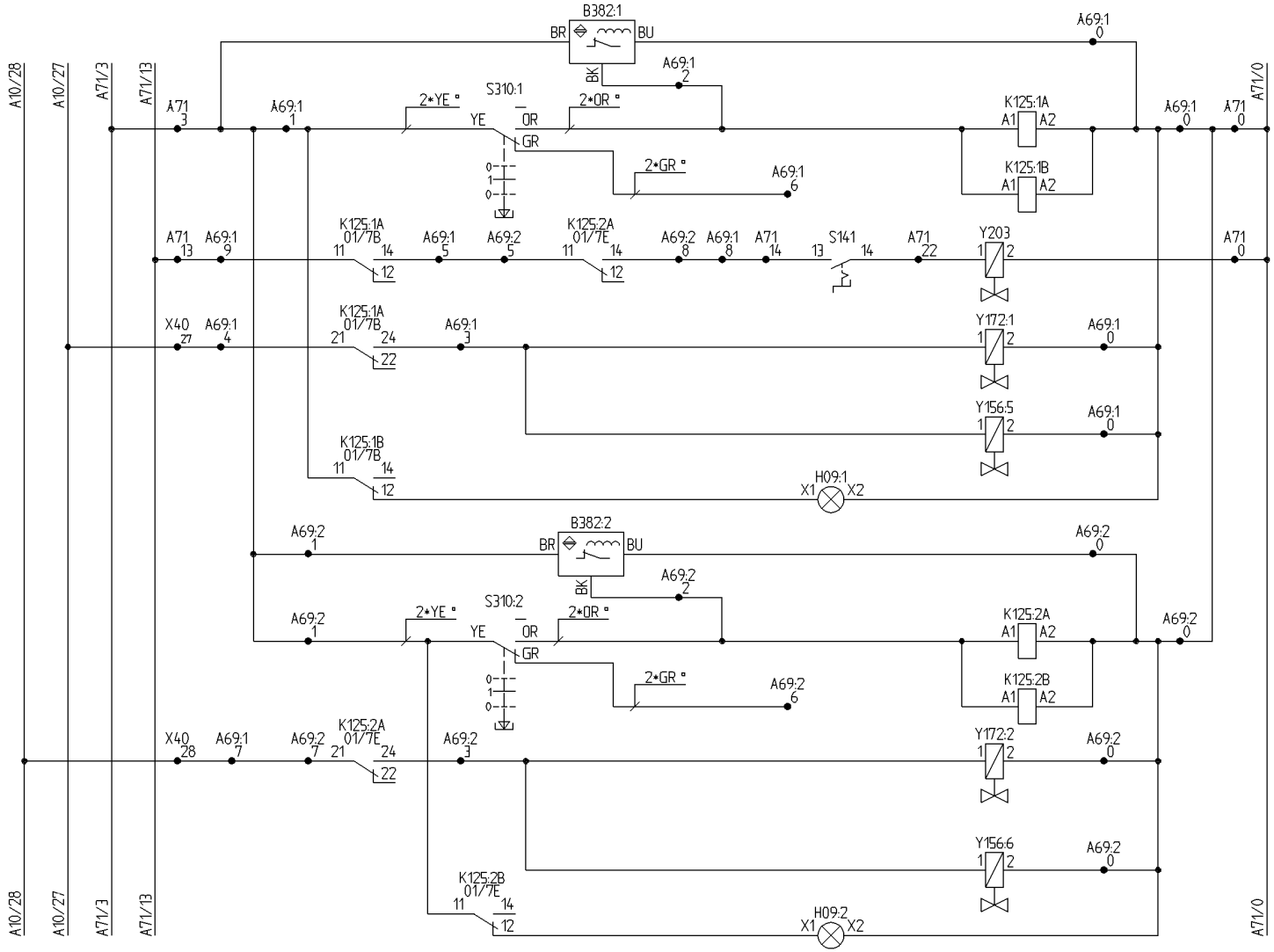

This document is our property and shall not, without our permission be altered, copied, used for manufacturing or communicated to any other person or company.

Name	CIRCUIT DIAGRAM		DCS
	RELAY BOX A69:1 + A69:2		
	SAFE BOLTING		
Atlas Copco	Scale .	Fam. .	3
Transferred fr.	Drawn AVOLJ	Std.chd. .	
.	Design chd. .	Prod.chd. .	Appd. LJ
	Compare	Drg.owner TMG	
	Replaces .		
	Date 00-12-19	Designation 9106 0100 30	Sheet 01(02)

1	.	SHEET 02 ADDED TMG041294	04-02-24	LJ
Note	Pos.	Modified from	Date	Sign.

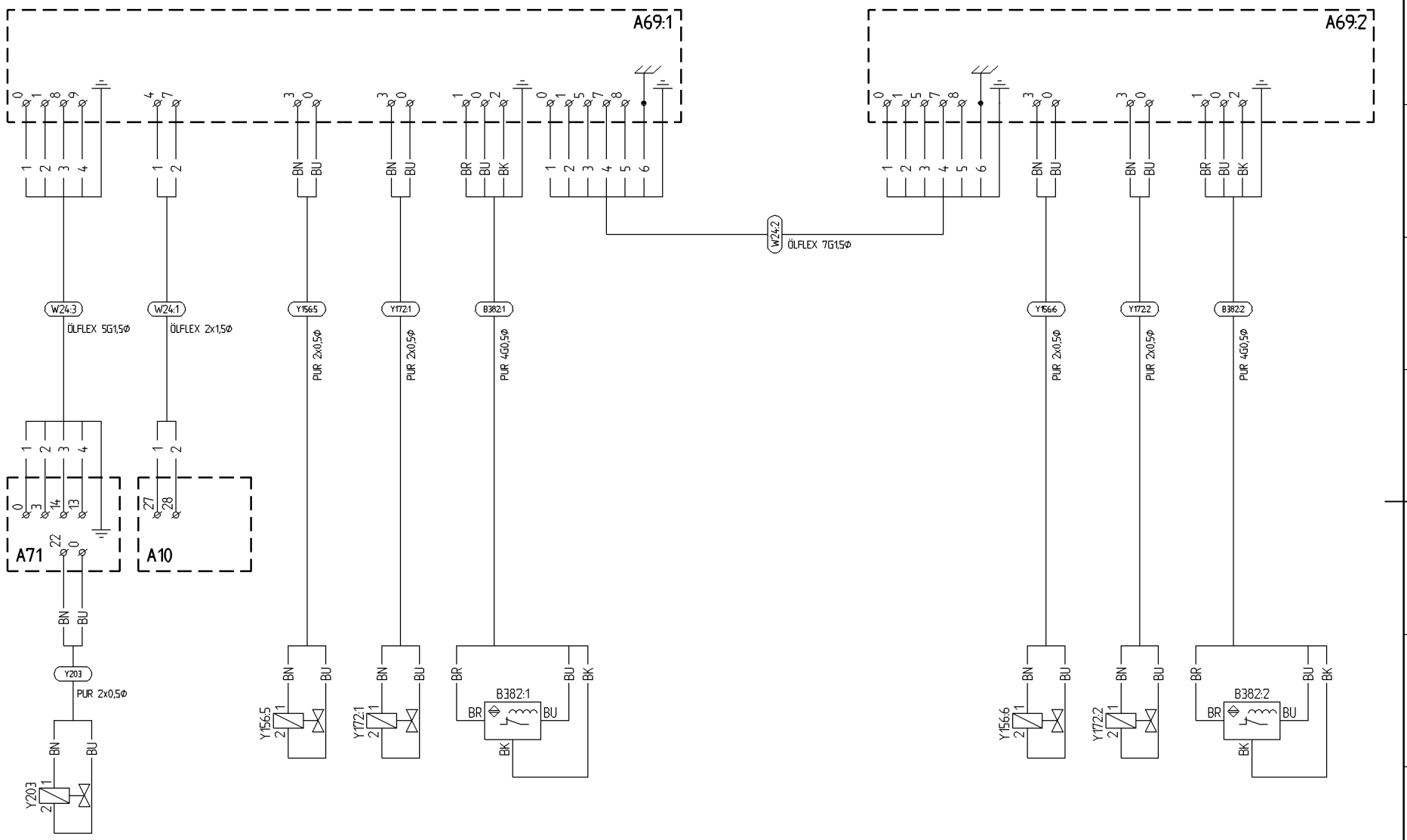

Ver 30

This document is our property and shall not, without our permission be altered, copied, used for manufacturing or communicated to any other person or company.

Note	Pos.	Modified from	Date	Sign.
1	·	SHEET 02 ADDED TMG041294	04-02-24	LJ

Name: CIRCUIT DIAGRAM DCS
RELAY BOX A69:1 + A69:2
SAFE BOLTING

Atlas Copco
Transferred fr.

Scale .	Fam. .	3	Compare	Drg.owner TMG
Drawn AVOLJ			Replaces .	
Std.chd. .			Designation 9106 0100 30	Sheet 02(02)
Design chd. .	Prod.chd. .	Appd. LJ	Date 00-12-19	

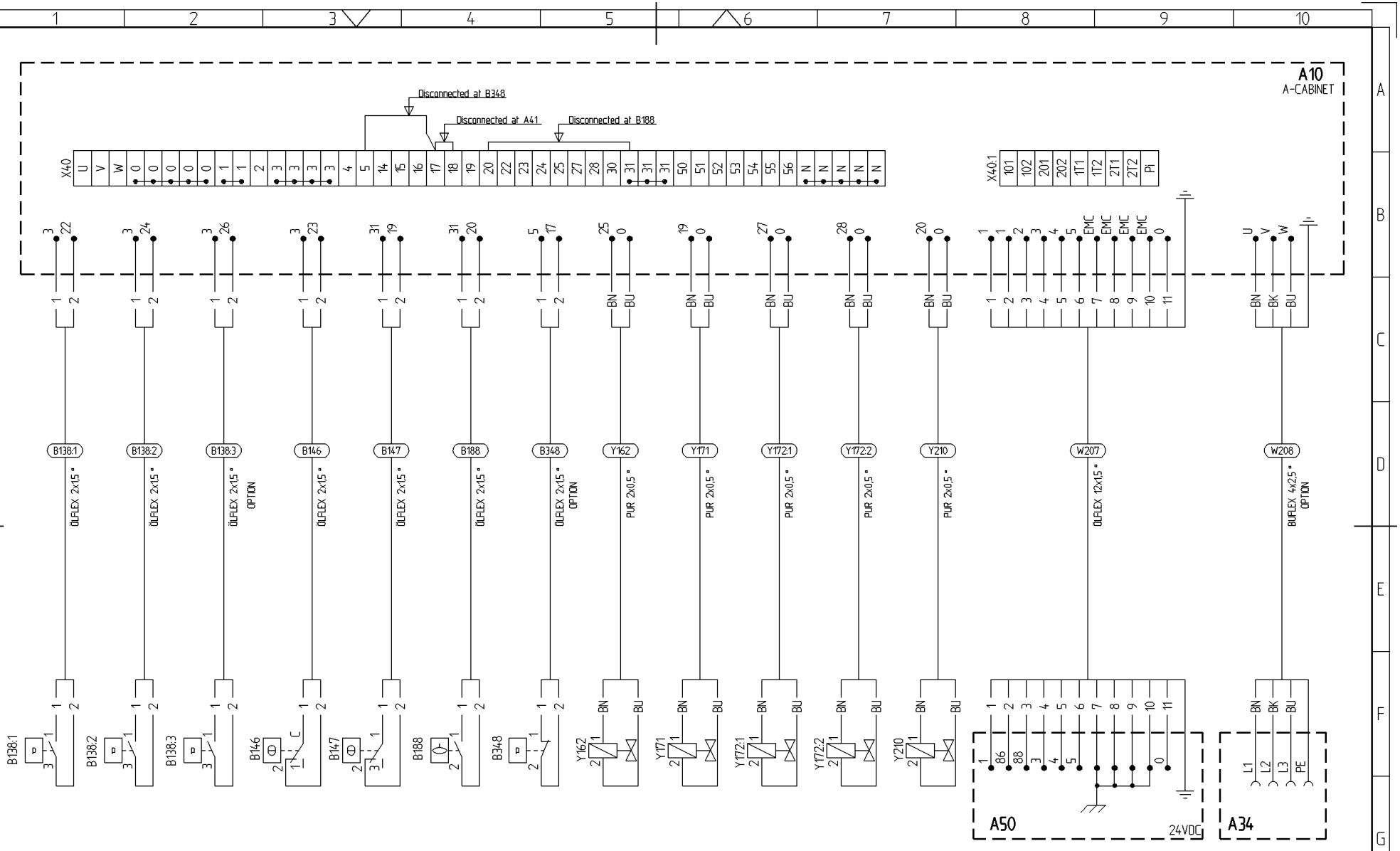

Name	YTTRE FÖRBINDNINGAR DCS
	EXTERNAL CONNECTIONS
	Y/D-START DCS IEC

Atlas Copco	Scale	Fam.	3	Compare	Drg.owner
	Drawn AVOLJ			Replaces	TMG
Transferred fr.	Std.chd.			Designation	Sheet 01(03)
	Design chd.	Prod.chd.	Appd. LJ	Date 07-04-16	9106 2184 34

Note	Pos.	Modified from	Date	Sign.
2	sh01	PLINTRAD JUSTERAD TMG084617	08-04-10	LJ
1	sh02	B141:1,2 ÄNDR. T. M12 KABLAGE TMG083470	08-03-07	LJ

This document is our property and shall not without our permission be altered, copied, used for manufacturing or communicated to any other person or company.

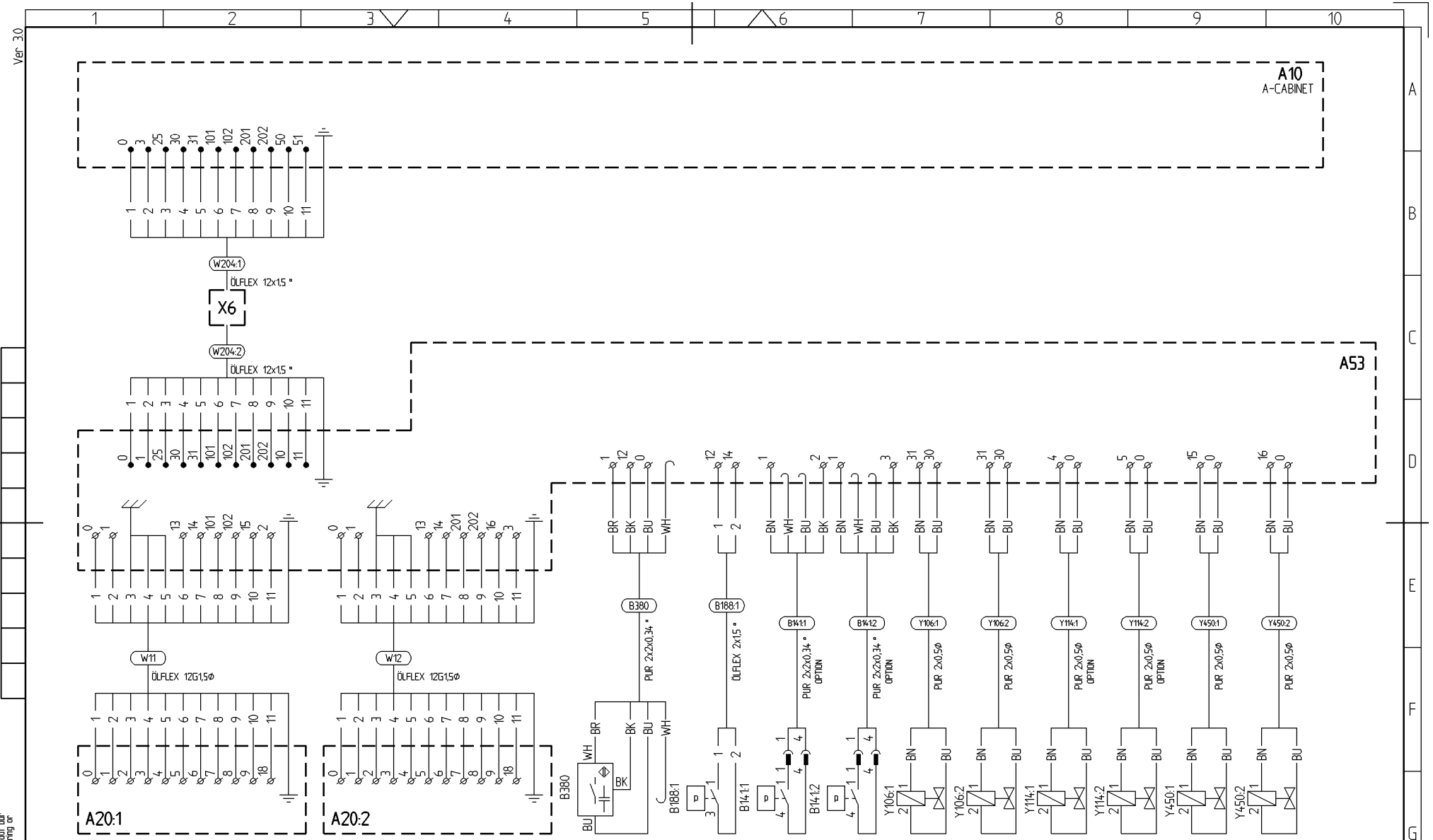

Note	Pos.	Modified from	Date	Sign.
2	sh01	PLINTRAD JUSTERAD TMG084617	08-04-10	LJ
1	sh02	B141:1,2 ÄNDR. T. M12 KABLAGE TMG083470	08-03-07	LJ

Name: YTTRE FÖRBINDNINGAR — DCS
EXTERNAL CONNECTIONS
Y/D-START DCS IEC

Atlas Copco
Transferred fr.

Scale	Fam.	3	Compare	Drg.owner	
Drawn AVOLJ			Replaces	TMG	
Std.chd.			Designation	Sheet 02(03)	
Design chd.	Prod.chd.	Appd. LJ	Date 07-04-16	9106 2184 34	

This document is our property and shall not, without our permission be altered, copied, used for manufacturing or communicated to any other person or company.

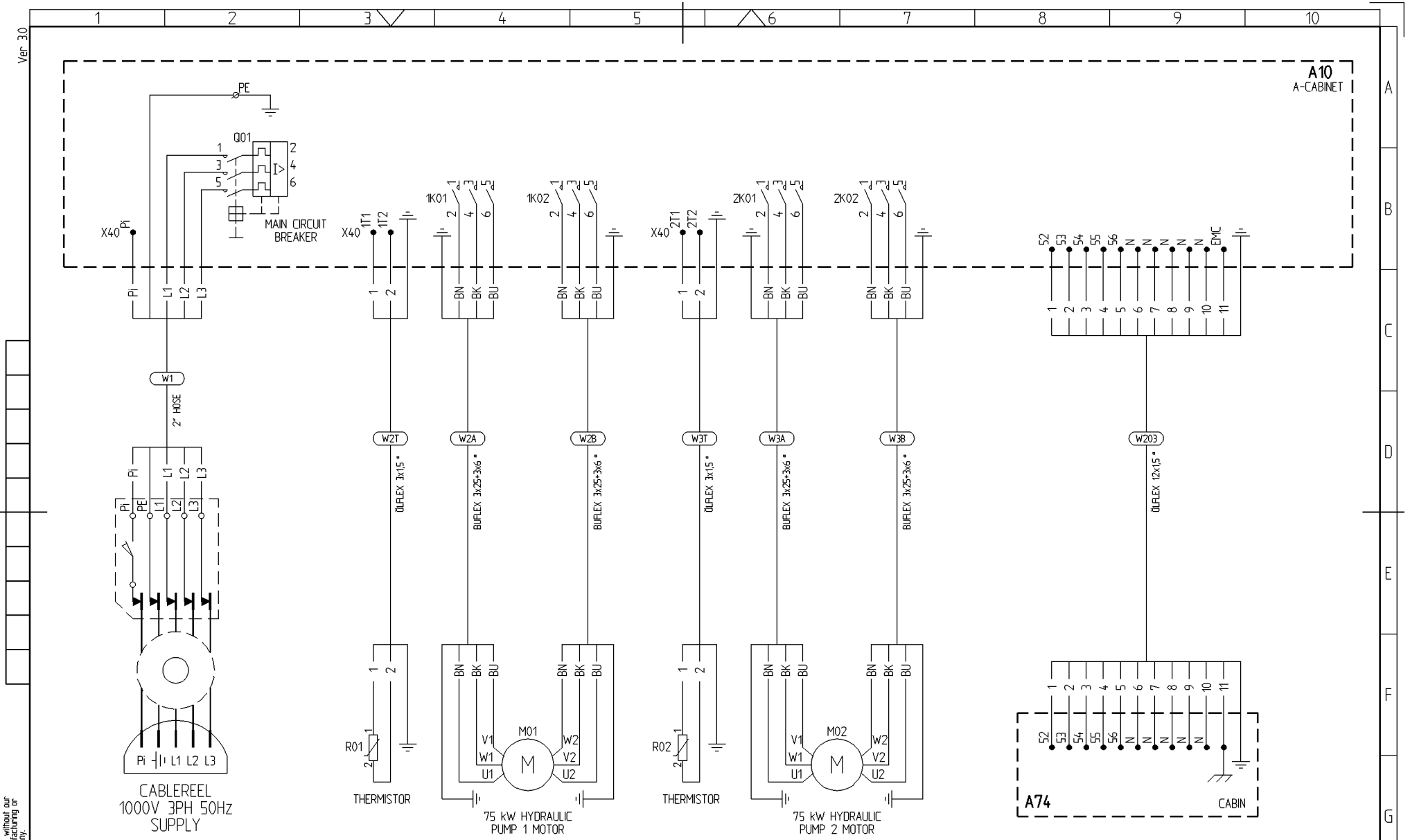

Note	Pos.	Modified from	Date	Sign.
2	sh01	PLINTRAD JUSTERAD TMG084617	08-04-10	LJ
1	sh02	B141:1,2 ÄNDR. T. M12 KABLAGE TMG083470	08-03-07	LJ

Name: YTTRE FÖRBINDNINGAR — DCS
EXTERNAL CONNECTIONS
Y/D-START DCS IEC

Atlas Copco
Transferred fr.

Scale	Fam.	3	Compare	Drg.owner	
Drawn AVOLJ			Replaces	TMG	
Std.chd.			Designation	Sheet 03(03)	
Design chd.	Prod.chd.	Appd. LJ	Date 07-04-16	9106 2184 34	

This document is our property and shall not, without our permission be altered, copied, used for manufacturing or communicated to any other person or company.

Ver 30

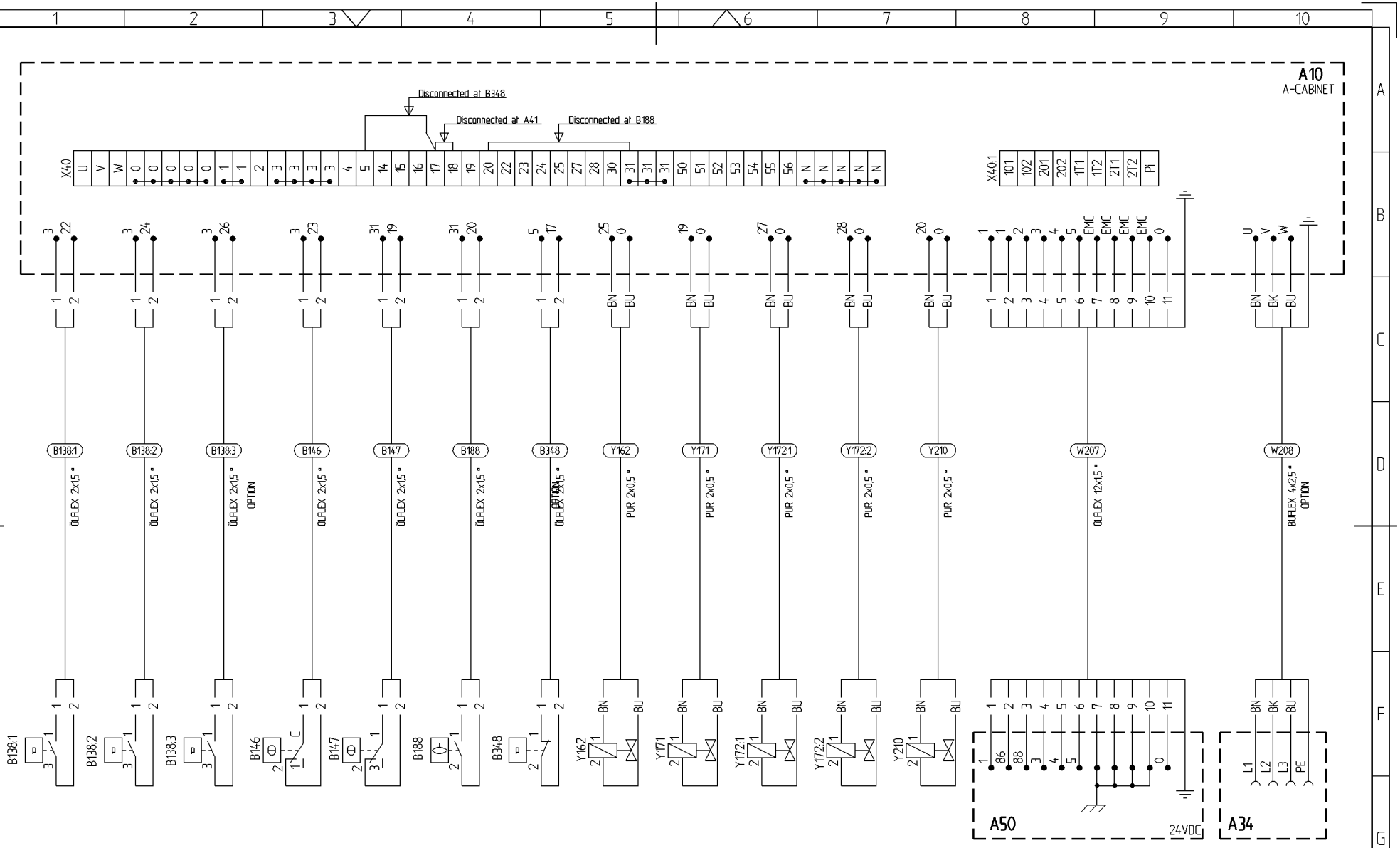

Name	YTTRE FÖRBINDNINGAR		DCS
	EXTERNAL CONNECTIONS		
	DOL-START 1000V DCS IEC		

Atlas Copco

Transferred fr.

Scale	Fam.	3	Compare	Drg.owner
Drawn AVOLJ			Replaces	TMG
Std.chd.			Designation	Sheet 01(03)
Design chd.	Prod.chd.	Appd. LJ	Date 07-05-07	9106 2184 44

Note	Pos.	Modified from	Date	Sign.
2	sh01	PLINTRAD JUSTERAD TMG084617	08-04-10	LJ
1	sh02	B141:1,2 ÄNDR. T. M12 KABLAGE TMG083470	08-03-07	LJ

This document is our property and shall not, without our permission be altered, copied, used for manufacturing or communicated to any other person or company.

Ver. 30

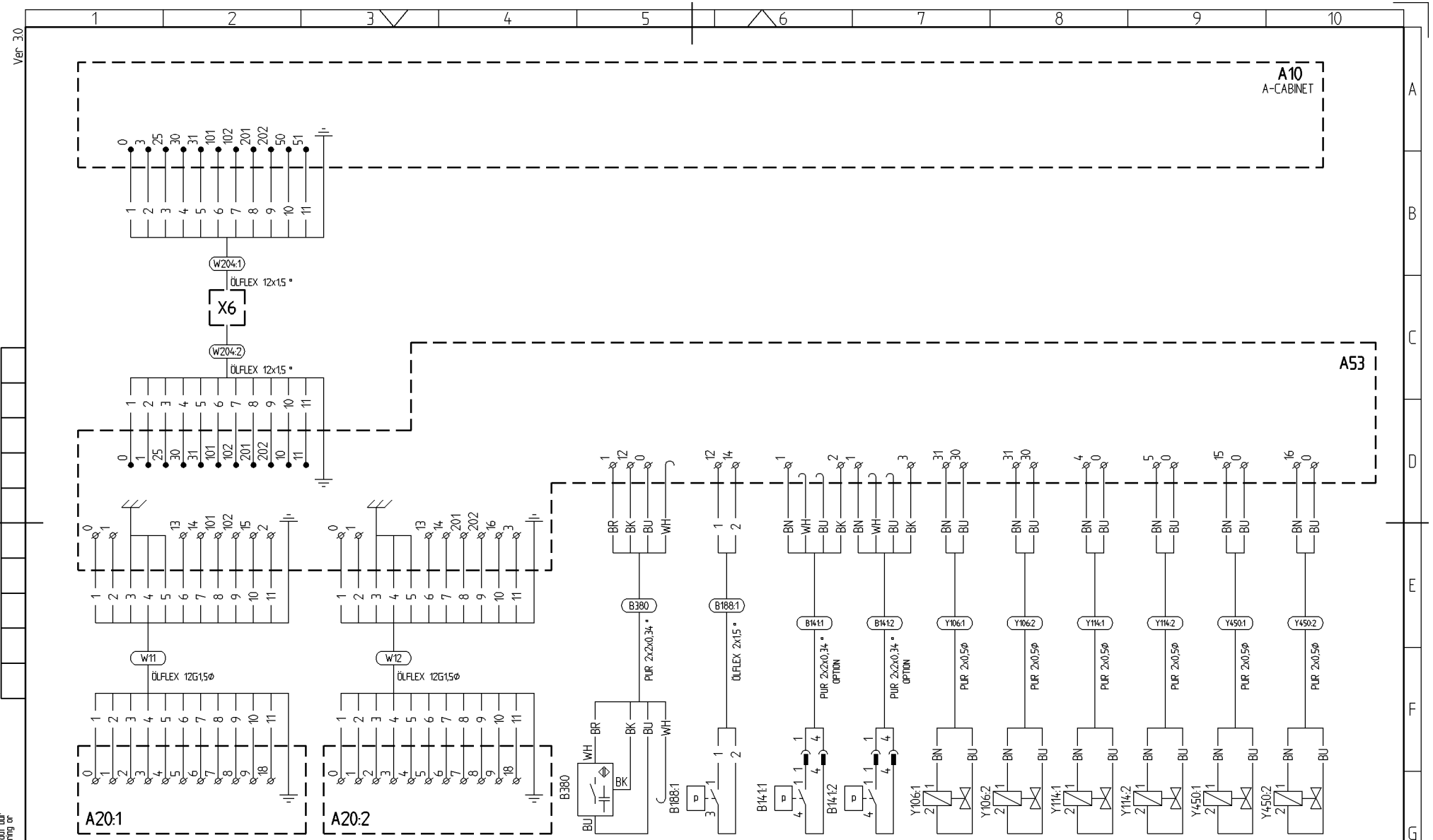

Name	YTTRE FÖRBINDNINGAR		DCS
	EXTERNAL CONNECTIONS		
	DOL-START 1000V DCS IEC		

Atlas Copco	Scale	Fam.	3	Compare	Drg.owner
Transferred fr.	Drawn AVOLJ			Replaces	TMG
	Std.chd.			Designation	Sheet 02(03)
	Design chd.	Prod.chd.	Appd. LJ	Date 07-05-07	9106 2184 44

Note	Pos.	Modified from	Date	Sign.
2	sh01	PLINTRAD JUSTERAD TMG084617	08-04-10	LJ
1	sh02	B141:1,2 ÄNDR. T. M12 KABLAGE TMG083470	08-03-07	LJ

This document is our property and shall not, without our permission be altered, copied, used for manufacturing or communicated to any other person or company.

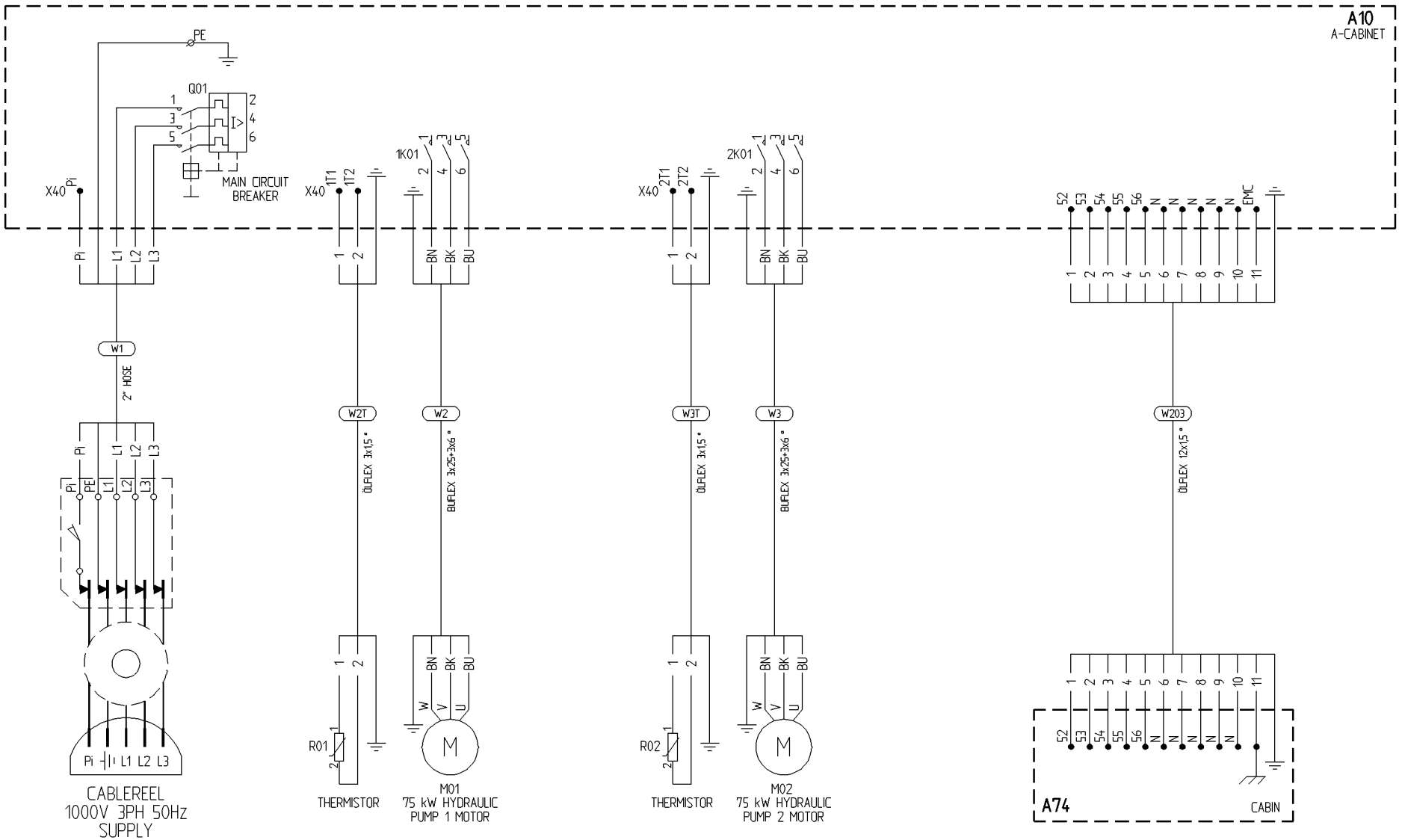

Note	Pos.	Modified from	Date	Sign.
2	sh01	PLINTRAD JUSTERAD TMG084617	08-04-10	LJ
1	sh02	B141:1,2 ÄNDR. T. M12 KABLAGE TMG083470	08-03-07	LJ

Name: YTTRE FÖRBINDNINGAR — DCS
EXTERNAL CONNECTIONS
DOL-START 1000V DCS IEC

Atlas Copco
Transferred fr.

Scale	Fam.	3	Compare	Drg.owner	
Drawn AVOLJ			Replaces	TMG	
Std.chd.			Designation	Sheet 03(03)	
Design chd.	Prod.chd.	Appd. LJ	Date 07-05-07	9106 2184 44	

This document is our property and shall not, without our permission be altered, copied, used for manufacturing or communicated to any other person or company.

A41 EMERGENCYSTOP BOX WITH PILOTE TEST BUTTON(OPTION)
A34 EXTERNAL OUTLET MAIN VOLTAGE OR TRANSFORMER(OPTION)
A50 MAIN APARATUS BOX FOR CARRIER ELECTRICS 24VDC
A53 APPARATUSBOX ON BOM FRAME
A74 WORKING LIGHT PANEL 230V
B141 WATERFLOW GARD
B146 HYDRAULIC OIL TEMP GARD
B147 COMPRESSOR OIL TEMP GARD
B188 PRESSURE SWITCH COMPRESSOR UNLOADING
B348 PRESSURE SWITCH FIRE SUPRESSION SYSTEM
ECL PULSE RELAY FOR ROCK DRILL LUBRICATRION
F01 ELECTRONIC OVERLOAD PROTECTION FOR ELECTRIC MOTOR
F02 MOTOR PROTECTION CIRCUIT BREAKER FOR EXTERNAL OUTLET OR SUPPLY OR EXTERNAL TRANSF. 16A
F03 AUTOMATIC CIRCUIT BREAKER FOR TRANSF. T04 32A
F10 MOTOR PROTECTION CIRCUIT BREAKER FOR TRANSF. T02 0,4A
F14 AUTOMATIC CIRCUIT BREAKER FOR CONTACTORCOILS 6A
F15 AUTOMATIC CIRCUIT BREAKER FOR EXTRA LIGHT + HEATER 10A
F16 AUTOMATIC CIRCUIT BREAKER FOR WALL OUTLET IN CABIN 10A
F17 AUTOMATIC CIRCUIT BREAKER FOR WORKING LIGHTS LEFT 10A
F18 AUTOMATIC CIRCUIT BREAKER FOR WORKING LIGHTS RIGHT 10A
F19 AUTOMATIC CIRCUIT BREAKER FOR POWER SUPPLY A40 6A
F25 GROUND FAULT CIRCUIT BREAKER(30mA) 32A FOR F15-F19
F100 FUSE RCS SYSTEM
F101 FUSE RCS SYSTEM
F102 FUSE RCS SYSTEM
F104 FUSE RCS SYSTEM
F105 FUSE RCS SYSTEM
H01 LIGHT IN DRILLPANEL
H02 SIGNAL LAMP FOR ELECTRIC MOTOR OVERLOAD AND MAIN CIRCUIT BREAKER TRIPPED
H03 SIGNAL LAMP FOR WRONG PHASE SEQUENCE
H04 SIGNAL LAMP FOR LOW HYDRAULIC OIL LEVEL
H05 SIGNAL LAMP FOR HIGH HYDRAULIC OIL TEMP
H06 SIGNAL LAMP FOR MAIN VOLTAGE CONNECTED
H08 ECL LUBRICATION WARNING LIGHT
K01 MAIN CONTACTOR, ELECTRICAL MOTOR
K01T STAR/DELTA RELAY
K02 D CONTACTOR, ELECTRICAL MOTOR
K03 Y CONTACTOR, ELECTRICAL MOTOR
K11 START RELAY ELECTRIC MOTOR
K20 RELAY FOR LOW HYDRAULIC OIL LEVEL SIGNAL
K21 RELAY FOR HIGH HYDRAULIC OIL TEMP SIGNAL
K50 PHASE SEQUENCE RELAY
K51 GROUND FAULT RELAY 300mA AND 500ms

K53:1 EMERGENSY STOP RELAY (MASTER)
K53:2 EMERGENSY STOP RELAY (SLAVE)
K110A RCS START RELAY
K110B RCS BACKUP BATTERY RELAY
K141 RELAY FOR WATERPUMP START CIRCUIT
M01 ELECTRIC MOTOR PUMP 1
M02 ELECTRIC MOTOR PUMP 2
M10 FAN, ELECTRICAL CABINET
N109 RCS OVERVOLTAGE PROTECTION
P01 VOLT/AMPERE/HOUR-METER
Q01 MAIN CIRCUIT BREAKER
Q01:1 UNDERVOLTAGE COIL INSIDE MAIN CIRCUIT BREAKER
R01 TERMISTOR INSIDE ELECTRICAL MOTOR (155dgrC)
S01 EMERGENCY STOP BUTTON
S02 PILOTE TEST BUTTON(OPTION)
S10 ANTIPARALLELL PUSHBUTTON ON JOYSTIC
S11 MOTOR CIRCUIT BREAKER, MOTOR 1 (CONTROL VOLTAGE)
S12 MOTOR CIRCUIT BREAKER, MOTOR 2 (CONTROL VOLTAGE)
S23 LIMIT SWITCH LEFT DOOR
S24 LIMIT SWITCH RIGHT DOOR
S105 PUMP START BUTTON IN DRILLPANEL
S106 PUMP STOP BUTTON IN DRILLPANEL
T01 TRANSFORMER FOR PHASE SEQUENCE RELAY AT 1000V
T02 TRANSFORMER 110VAC + 24VDC 50VA
T04 TRANSFORMER 115 & 230VAC 8kVA
T10 CURRENT TRANSFORMER FOR K51 GROUND FAULT RELAY
T11 CURRENT TRANSFORMER, ELECTRIC MOTOR
U40 POWERSUPPLY UNIT
V02 DIODE UNIT FOR EMERGENCY STOP CIRCUIT
V03 DIODE UNIT WATERPUMP START CIRCUIT
V10 DIODE, PILOTE TEST
Z01 VARISTOR CONTACTOR K01 (EMC PROTECTION)
Z02 VARISTOR CONTACTOR K02 (EMC PROTECTION)
Z03 VARISTOR CONTACTOR K03 (EMC PROTECTION)
Y106 ECL OIL PUMP
Y114 VALVE FOR THE OPTION STOP DRILLING WHEN NO WATER FLOW
Y162 WATERPUMP START VALVE
Y171 COMPRESSOR START VALVE
Y172 UNLOADING VALVE HYDRAULIC PUMP (POSITIONING PUMP)
Y210 UNLOADING VALVE COMPRESSOR
Y450 ANTIPARALLELL HOLDING VALVE

Note	Pos.	Modified from	Date	Sign.
3	sh05	S11 & S12 JUST. TILL 1-POL TMG088090	08-08-13	LJ
2	sh07	INK.AV U40 ÄNDRAD TMG080069	07-11-23	LJ
1		SCHEMA JUSTERAT TMG077435	07-09-12	LJ

Name KRETSSCHEMA DCS
CIRCUIT DIAGRAM
DOL-START 1000V DCS IEC

Atlas Copco
Transferred fr.

Scale | Fam. | 3 | Compare | Drg.owner
Drawn AVOLJ | Replaces TMG
Std.chd. | Designation | Sheet 01(09)
Design chd. | Prod.chd. | Appd. LJ | Date 07-05-07 | 9106 2184 45

This document is our property and shall not without our permission be altered, copied, used for manufacturing or communicated to any other person or company.

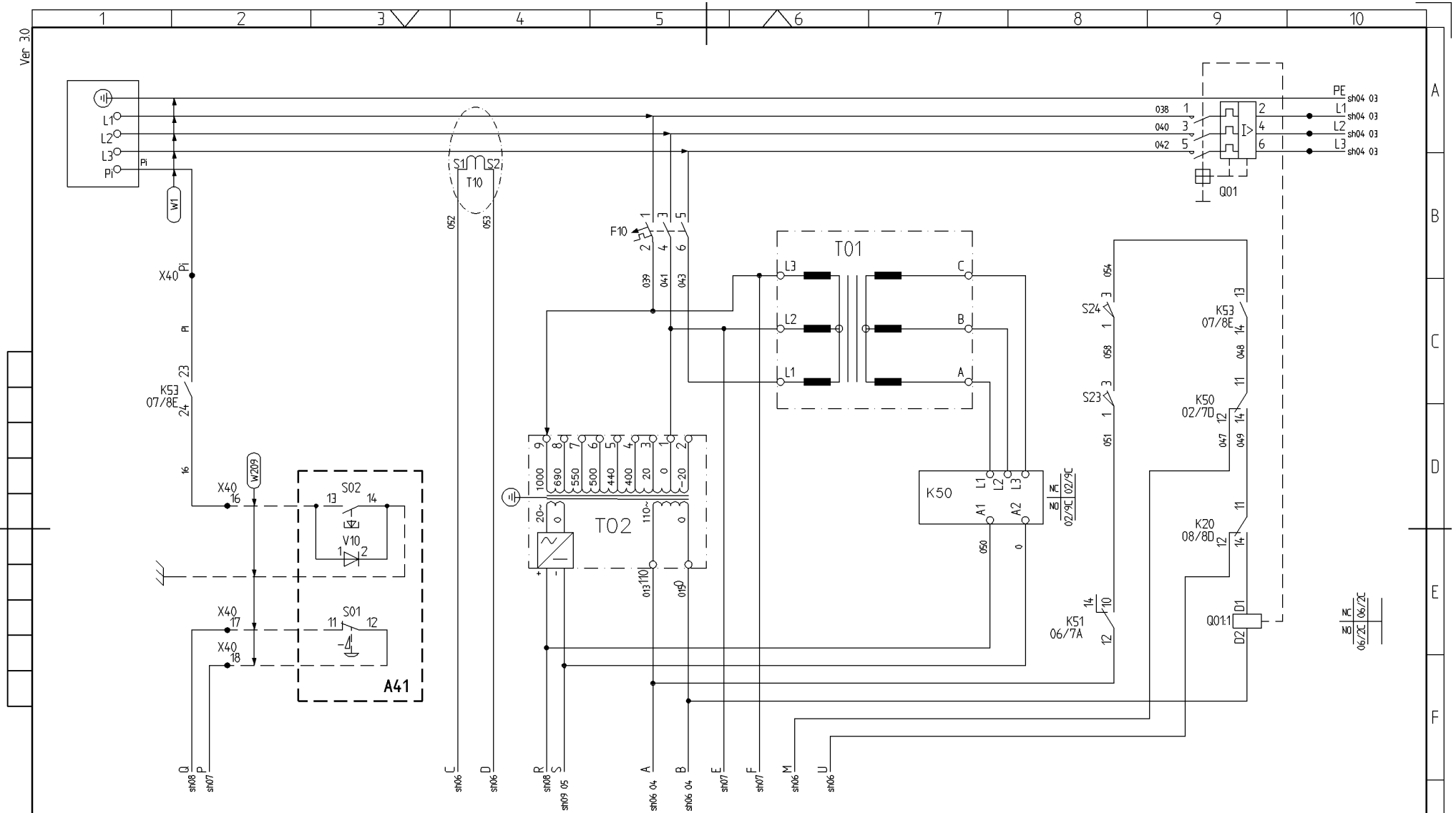

3	sh05	S11 & S12 JUST. TILL 1-POL TMG088090	08-08-13	LJ
2	sh07	INK.AV U40 ÄNDRAD TMG080069	07-11-23	LJ
1		SCHEMA JUSTERAT TMG077435	07-09-12	LJ
Note	Pos.	Modified from	Date	Sign.

Name: KRETSSCHEMA — DCS
CIRCUIT DIAGRAM
DOL-START 1000V DCS IEC

Atlas Copco
Transferred fr.

Scale | Fam. | 3 | Compare | Drg.owner
Drawn: AVOLJ | Replaces | TMG
Std.chd. | Designation | Sheet 02(09)
Design chd. | Prod.chd. | Appd. LJ | Date 07-05-07 | 9106 2184 45

This document is our property and shall not, without our permission be altered, copied, used for manufacturing or communicated to any other person or company.

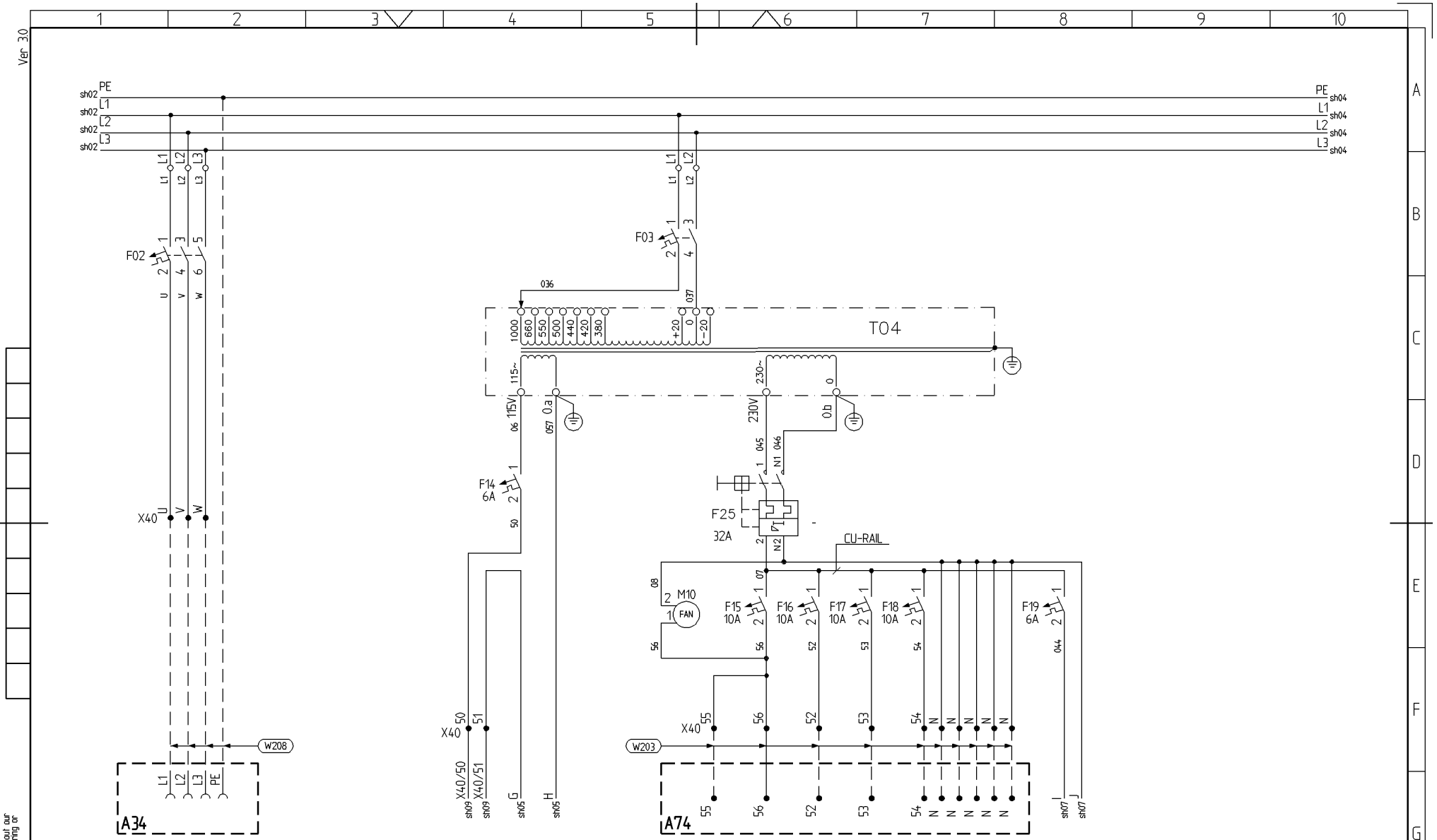

3	sh05	S11 & S12 JUST. TILL 1-POL TMG088090	08-08-13	LJ
2	sh07	INK.AV U40 ÄNDRAD TMG080069	07-11-23	LJ
1		SCHEMA JUSTERAT TMG077435	07-09-12	LJ
Note	Pos.	Modified from	Date	Sign.

Name KRETSSCHEMA DCS
CIRCUIT DIAGRAM
DOL-START 1000V DCS IEC

Atlas Copco
Transferred fr.

Scale	Fam.	3	Compare	Drg.owner	
Drawn AVOLJ			Replaces	TMG	
Std.chd.			Designation	Sheet 03(09)	
Design chd.	Prod.chd.	Appd. LJ	Date 07-05-07	9106 2184 45	

This document is our property and shall not, without our permission be altered, copied, used for manufacturing or communicated to any other person or company.

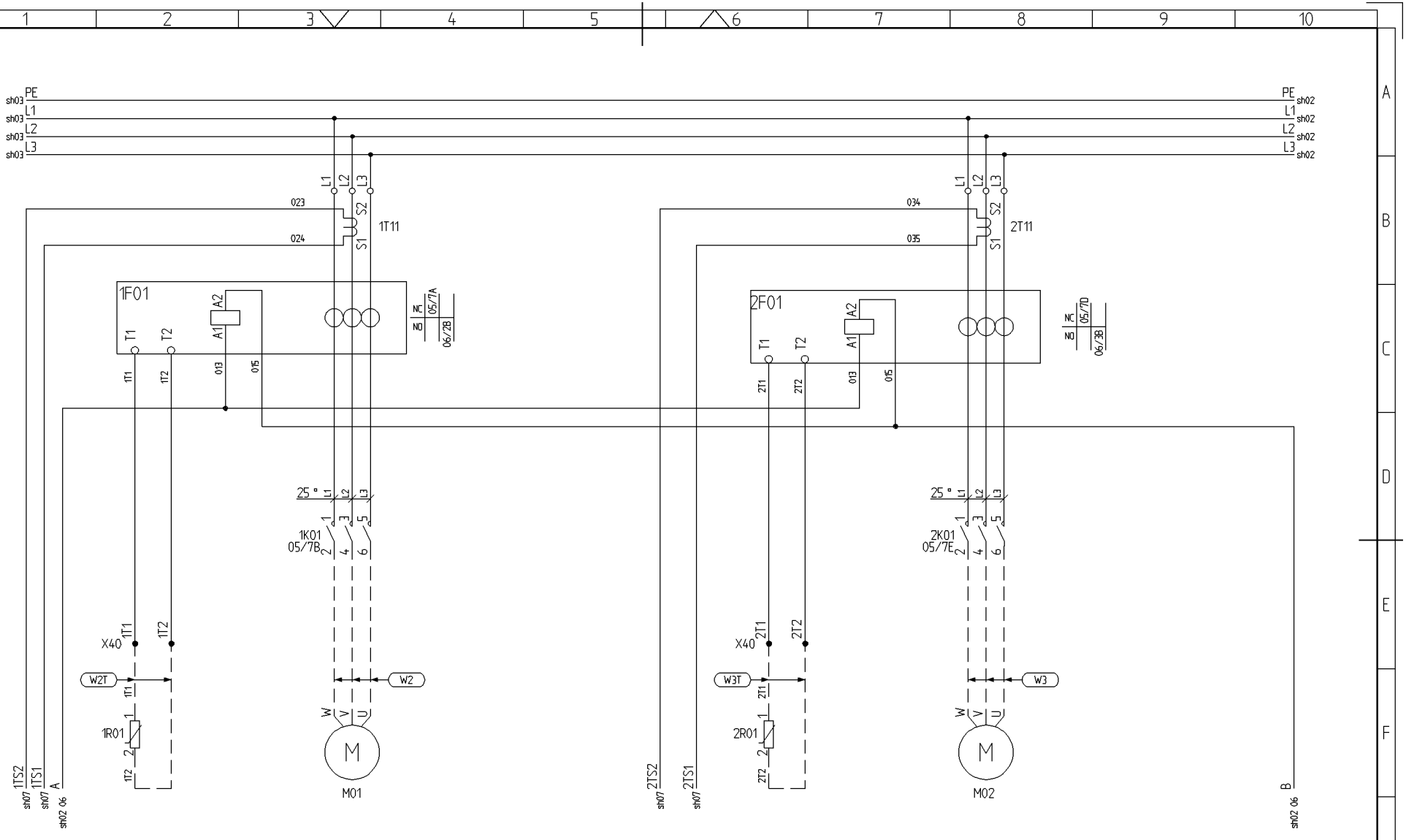

Note	Pos.	Modified from	Date	Sign.
3	sh05	S11 & S12 JUST. TILL 1-POL TMG088090	08-08-13	LJ
2	sh07	INK.AV U40 ÄNDRAD TMG080069	07-11-23	LJ
1		SCHEMA JUSTERAT TMG077435	07-09-12	LJ

Name KRETSSCHEMA DCS
CIRCUIT DIAGRAM
DOL-START 1000V DCS IEC

Atlas Copco
Transferred fr.

Scale	Fam.	3	Compare	Drg.owner
Drawn AVOLJ			Replaces	TMG
Std.chd.			Designation	Sheet 04 (09)
Design chd.	Prod.chd.	Appd. LJ	Date 07-05-07	9106 2184 45

This document is our property and shall not, without our permission be altered, copied, used for manufacturing or communicated to any other person or company.

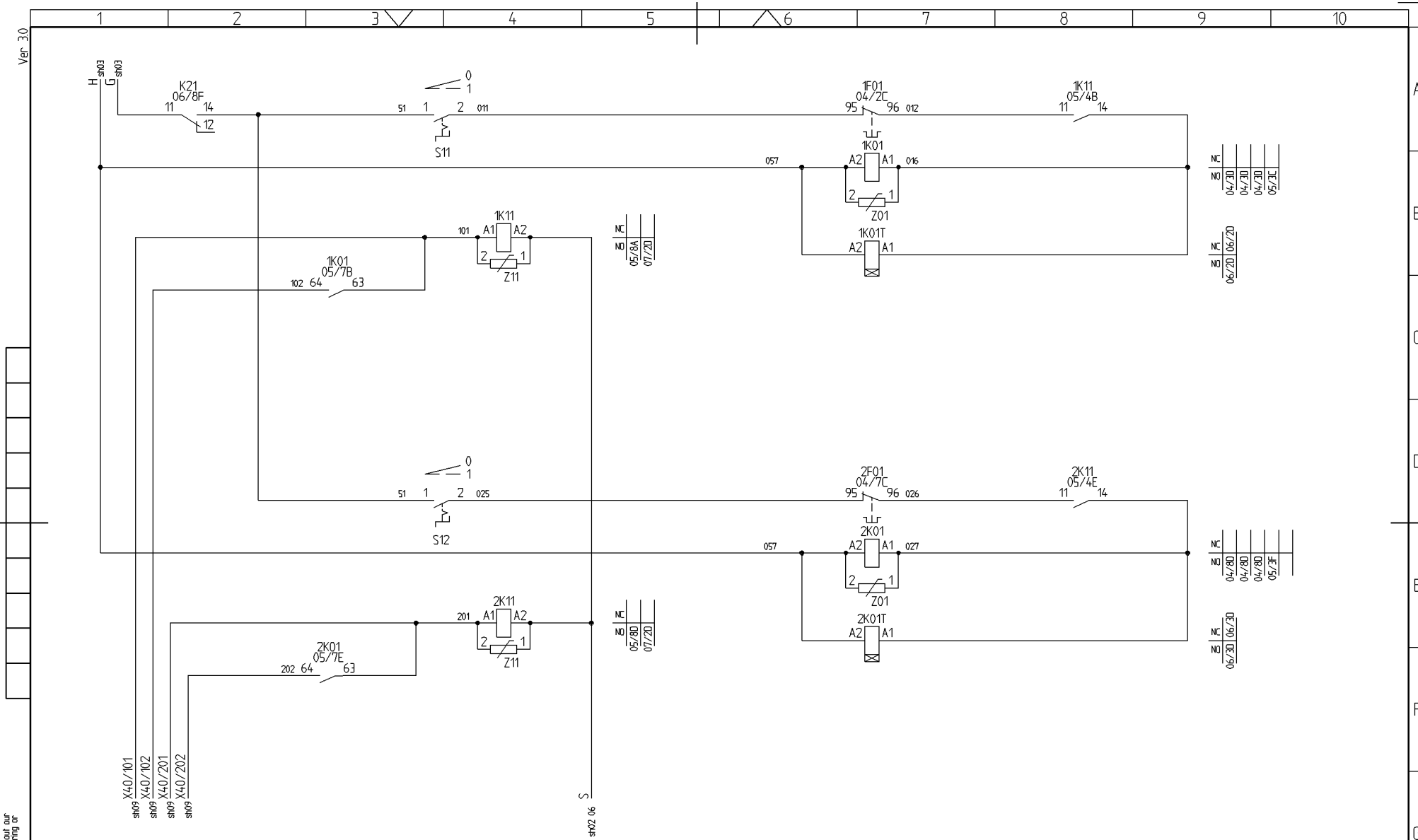

This document is our property and shall not, without our permission be altered, copied, used for manufacturing or communicated to any other person or company.

Note	Pos.	Modified from	Date	Sign.
3	sh05	S11 & S12 JUST. TILL 1-POL TMG088090	08-08-13	LJ
2	sh07	INK.AV U40 ÄNDRAD TMG080069	07-11-23	LJ
1		SCHEMA JUSTERAT TMG077435	07-09-12	LJ

Name KRETSSCHEMA DCS
CIRCUIT DIAGRAM
DOL-START 1000V DCS IEC

Atlas Copco
Transferred fr.

Scale | Fam. | 3 | Compare | Drg.owner
Drawn AVOLJ | Replaces TMG
Std.chd. | Designation | Sheet 05(09)
Design chd. | Prod.chd. | Appd. LJ | Date 07-05-07
9106 2184 45

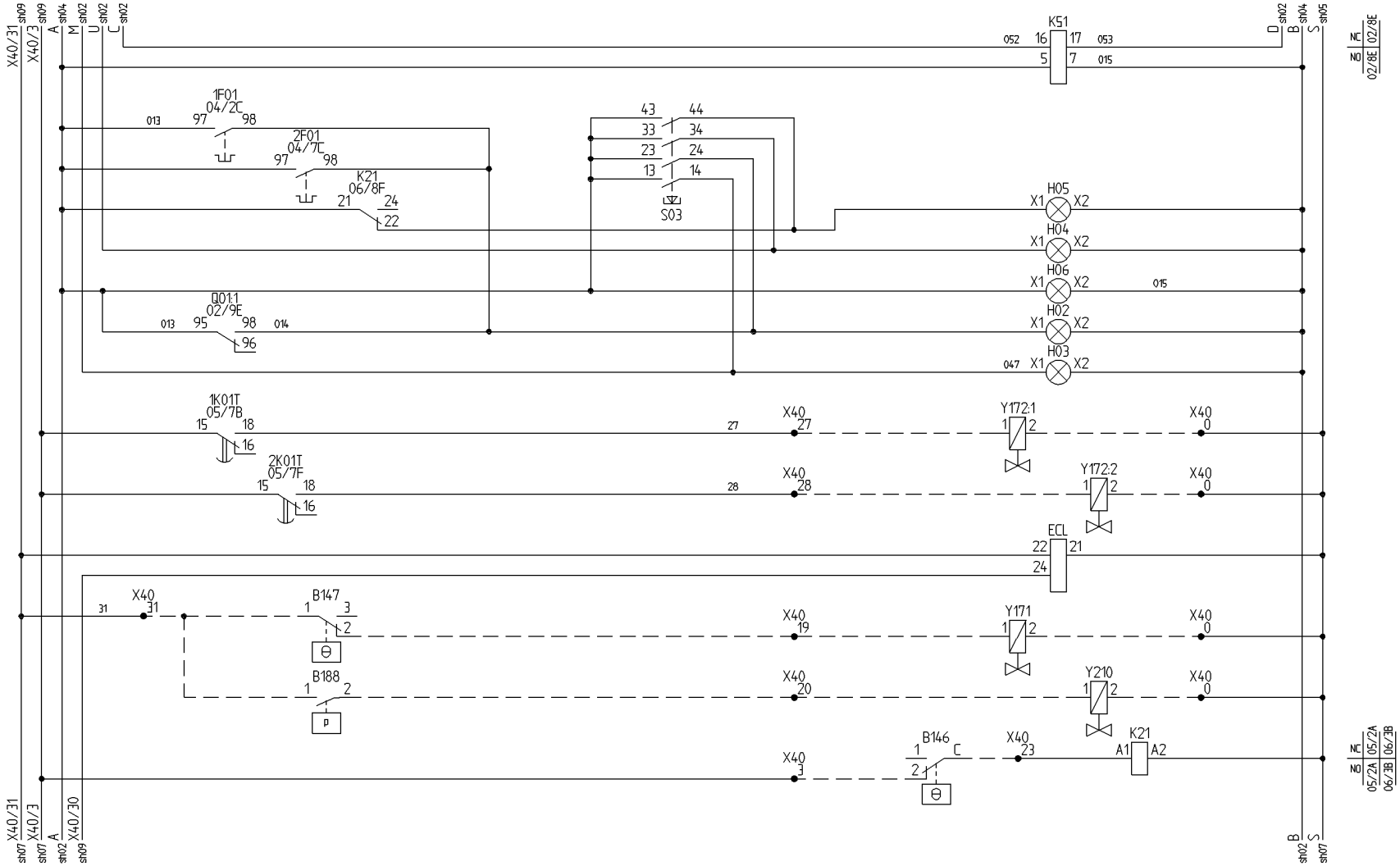

Note	Pos.	Modified from	Date	Sign.
3	sh05	S11 & S12 JUST. TILL 1-POL TMG088090	08-08-13	LJ
2	sh07	INK.AV U40 ÄNDRAD TMG080069	07-11-23	LJ
1		SCHEMA JUSTERAT TMG077435	07-09-12	LJ

Name: KRETSSCHEMA — DCS
CIRCUIT DIAGRAM
DOL-START 1000V DCS IEC

Atlas Copco
Transferred fr.

Scale	Fam.	3	Compare	Drg.owner	
Drawn AVOLJ			Replaces	TMG	
Std.chd.			Designation	Sheet 06 (09)	
Design chd.	Prod.chd.	Appd. LJ	Date 07-05-07	9106 2184 45	

This document is our property and shall not, without our permission be altered, copied, used for manufacturing or communicated to any other person or company.

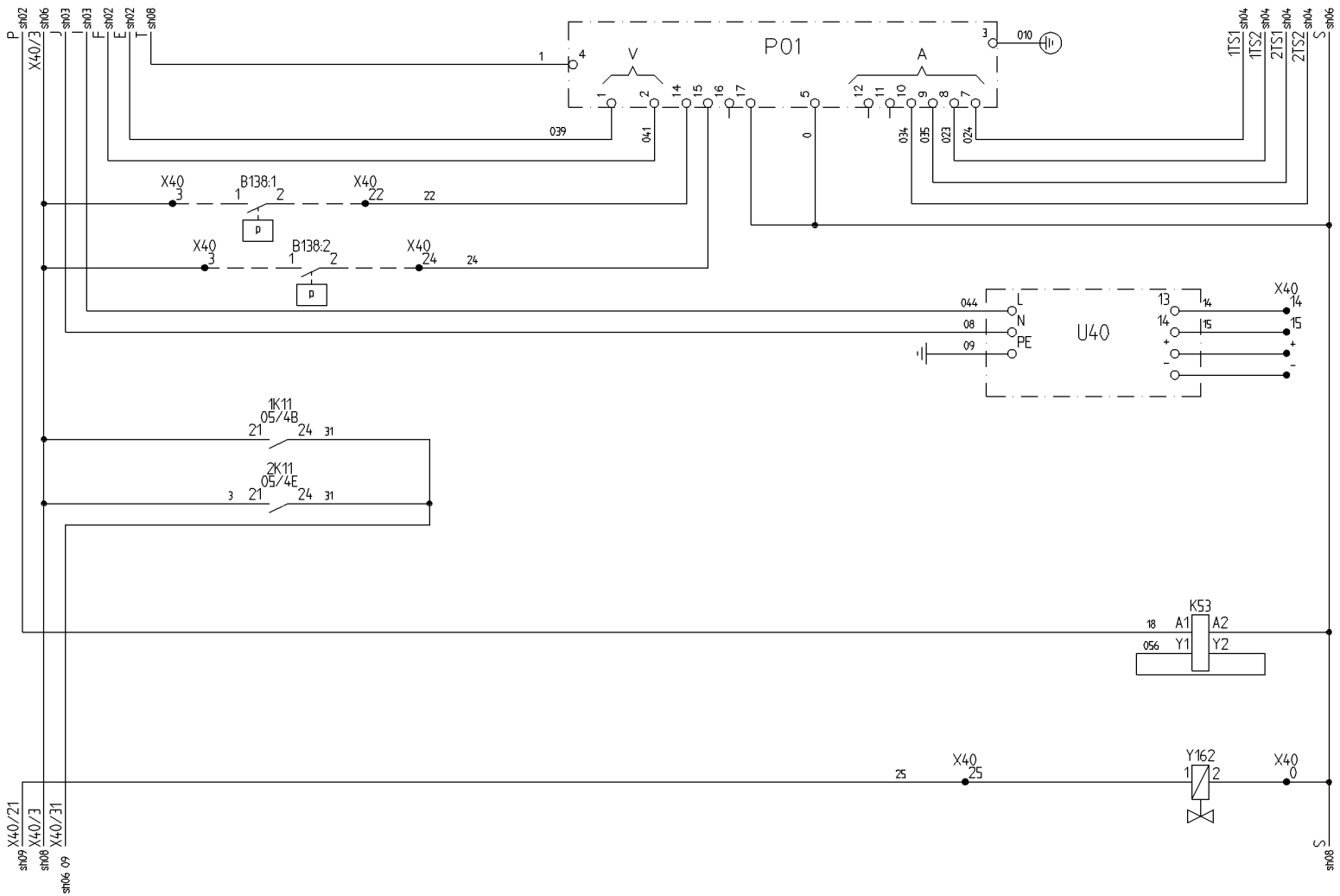

3	sh05	S11 & S12 JUST. TILL 1-POL TMG088090	08-08-13	LJ
2	sh07	INK.AV U40 ÄNDRAD TMG080069	07-11-23	LJ
1		SCHEMA JUSTERAT TMG077435	07-09-12	LJ
Note	Pos.	Modified from	Date	Sign.

Name KRETSSCHEMA DCS
CIRCUIT DIAGRAM
DOL-START 1000V DCS IEC

Atlas Copco
Transferred fr.

Scale | Fam. | 3 | Compare | Drg.owner
Drawn AVOLJ | | | Replaces | TMG
Std.chd. | | | Designation | Sheet 07(09)
Design chd. | Prod.chd. | Appd. LJ | Date 07-05-07 | 9106 2184 45

This document is our property and shall not, without our permission be altered, copied, used for manufacturing or communicated to any other person or company.

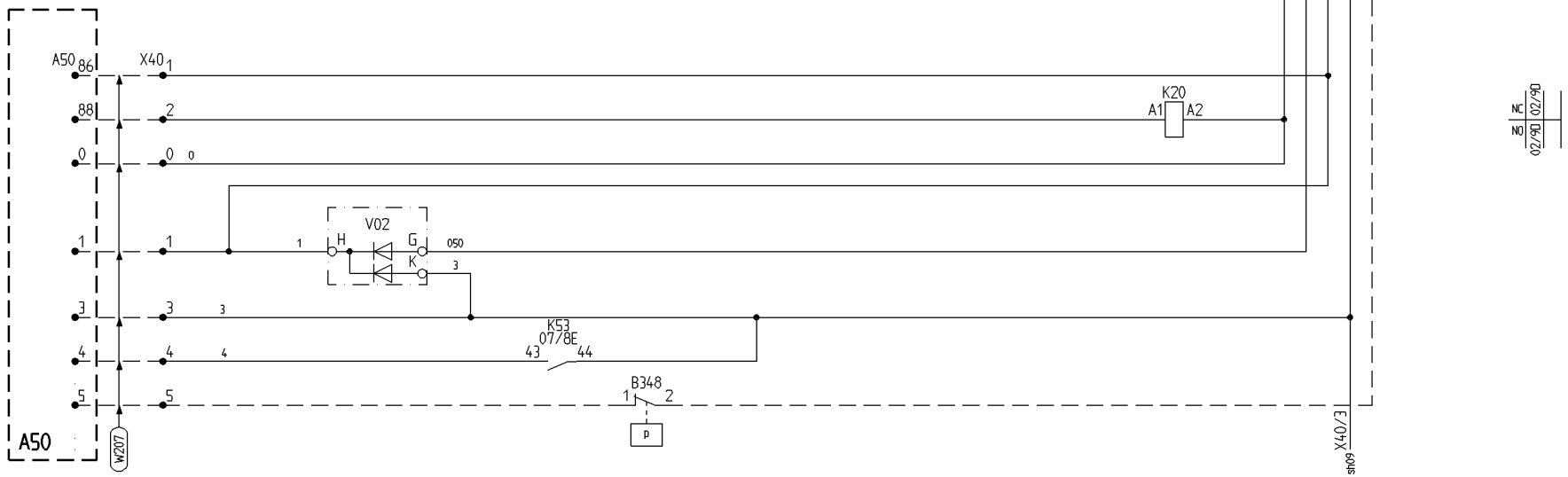

Note	Pos.	Modified from	Date	Sign.
3	sh05	S11 & S12 JUST. TILL 1-POL TMG088090	08-08-13	LJ
2	sh07	INK.AV U40 ÄNDRAD TMG080069	07-11-23	LJ
1		SCHEMA JUSTERAT TMG077435	07-09-12	LJ

Name KRETSSCHEMA DCS
CIRCUIT DIAGRAM
DOL-START 1000V DCS IEC

Atlas Copco
Transferred fr.

Scale | Fam. | 3 | Compare | Drg.owner
Drawn AVOLJ | | | Replaces | TMG
Std.chd. | | | Designation | Sheet 08 (09)
Design chd. | Prod.chd. | Appd. LJ | Date 07-05-07 | 9106 2184 45

This document is our property and shall not, without our permission be altered, copied, used for manufacturing or communicated to any other person or company.

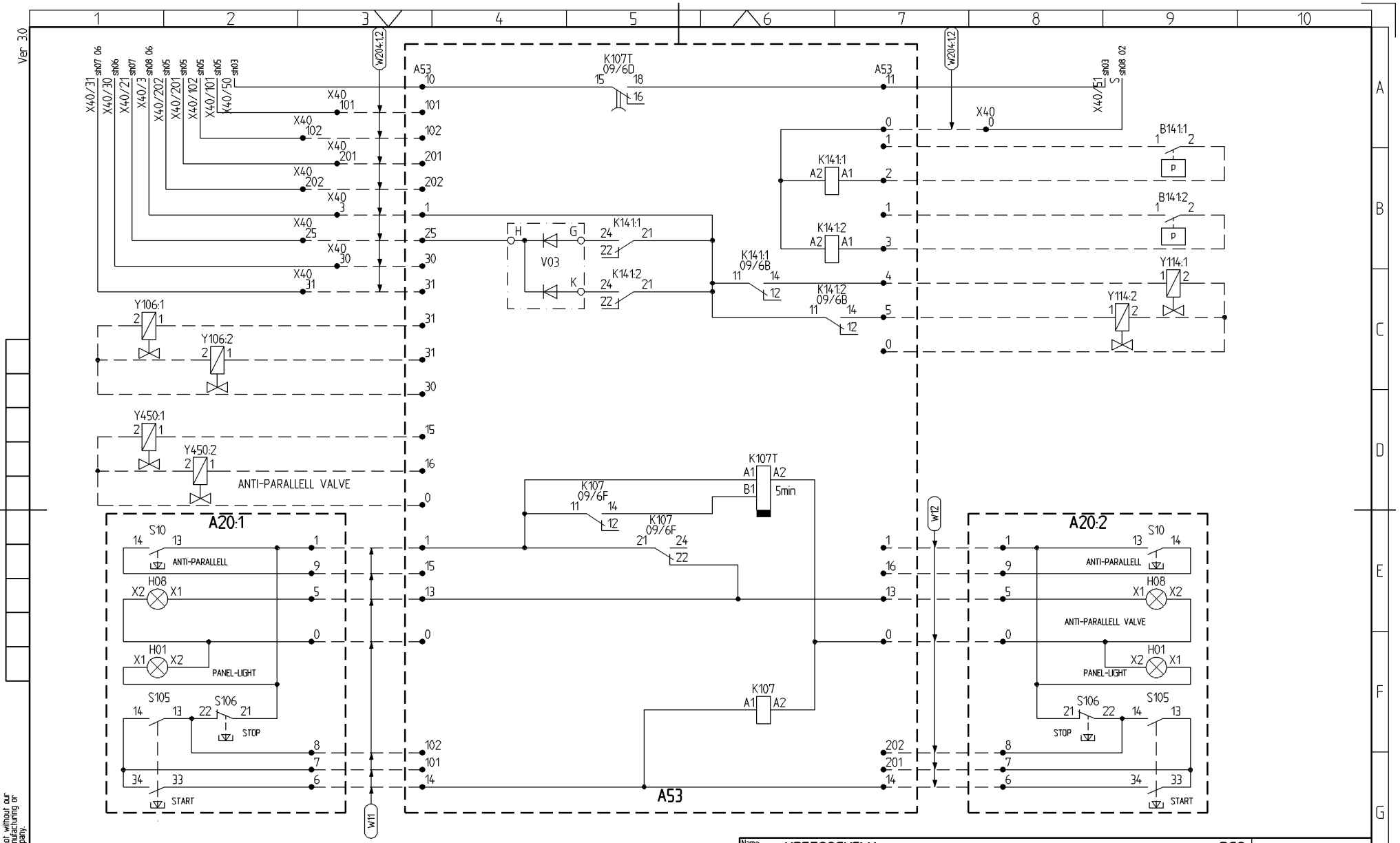

3	sh05	S11 & S12 JUST. TILL 1-POL TMG088090	08-08-13	LJ
2	sh07	INK.AV U40 ÄNDRAD TMG080069	07-11-23	LJ
1		SCHEMA JUSTERAT TMG077435	07-09-12	LJ
Note	Pos.	Modified from	Date	Sign.

Name KRETSSCHEMA DCS
CIRCUIT DIAGRAM
DOL-START 1000V DCS IEC

Atlas Copco
Transferred fr.

Scale		Fam.	3	Compare	Drg.owner
Drawn	AVOLJ			Replaces	TMG
Std.chd.				Designation	Sheet 09(09)
Design chd.	Prod.chd.	Appd. LJ	Date 07-05-07	9106 2184 45	

This document is our property and shall not, without our permission be altered, copied, used for manufacturing or communicated to any other person or company.

Hydraulic diagram
LIST OF CONTENTS

Art.no.	Description	Remarks	Page
3128318862	HYDR. SCHEDULE	BUT 35	60
3217781659	HYDR. SCHEDULE	WATER PUMP	61
3217883541	HYDR. SCHEDULE	CONTROL PANEL BOOMPOS.	62
3217883569	HYDR. SCHEDULE	DRILLING PANEL DCS-1800	63
3217896412	HYDR. SCHEDULE	TELESCOPIC FEED	64
3217896931	HYDR. SCHEDULE	REAMER	65
3217898830	HYDR. SCHEDULE	WATER FLOW SENSOR	66
3217998451	HYDRAULIC SET	SAFE BOLT	67
5112287881	HYDR. SCHEDULE	BRAKE AND STEERING SYSTEM	68
9106111853	HYDR. SCHEDULE	JACKS FRONT	69
9106129652	HYDR. SCHEDULE	PROT.ROOF	70
9106129969	HYDR. SCHEDULE	BASIC SYSTEM MK7	71
9106129972	HYDR. SCHEDULE	DRILLING SYSTEM	72
9106143725	HYDR. SCHEDULE	COMPRESSOR OILCOOLED	73
9106150983	HYDR. SCHEDULE	CABLEREEL L/M 1&2&3-BOOM	74
9106156302	HYDR. SCHEDULE	REAR JACKS	75
9106156399	HYDR. SCHEDULE	GUIDE CONTROL,WA/EL-REELS	76
9106156415	HYDR. SCHEDULE	COMPRESSOR BOOSTER	77
9106156429	HYDR. SCHEDULE	POWER UNIT	78

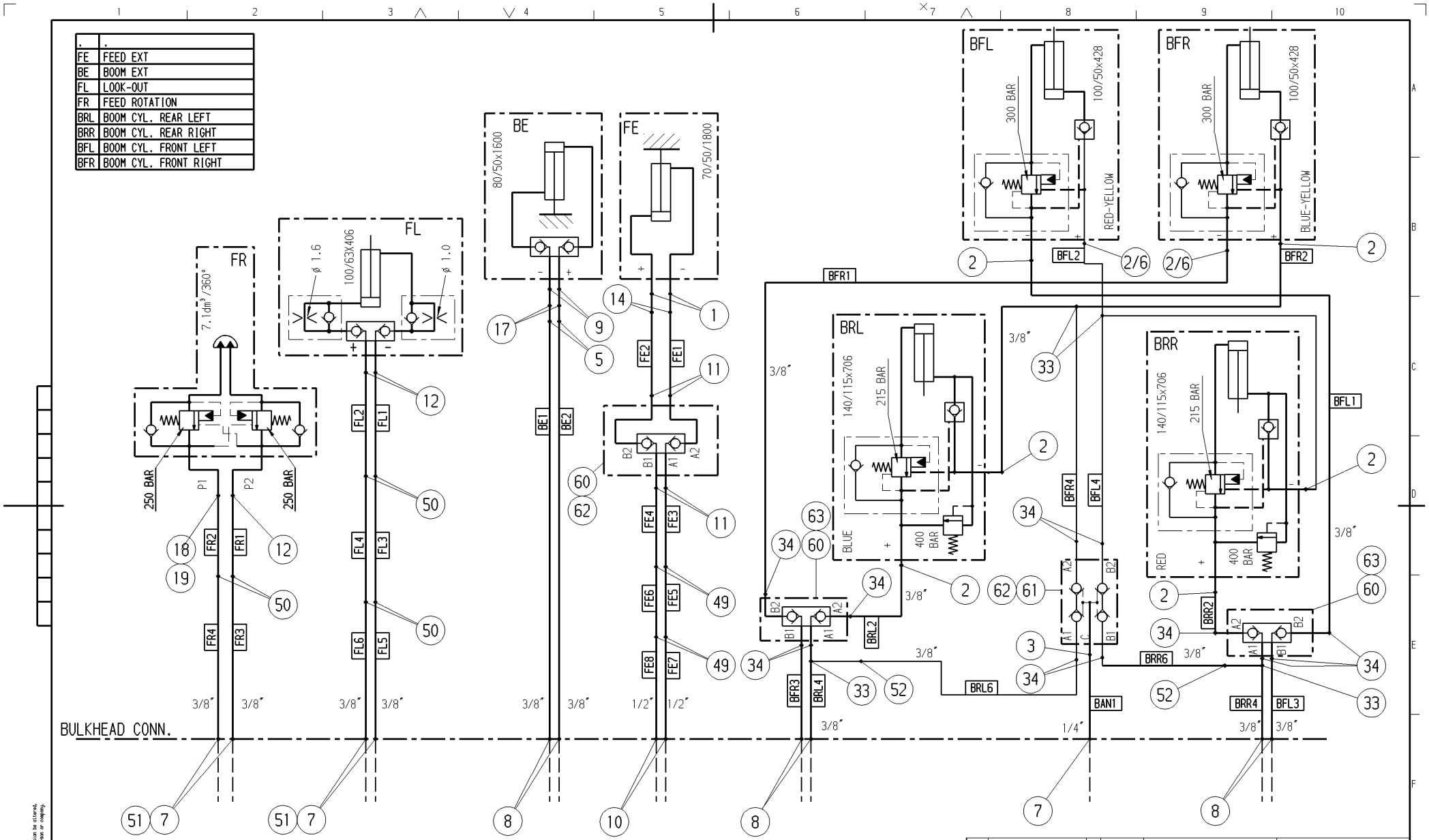

Pos.	Designation	Number	Name	Material
Tolerances, if not indicated, according to: ATLAS COPCO STANDARD / Class		Machined surfaces 1350 K /		
Name	HYDRAULSCHEMA		BUT 35SL G	Secrecy class 1102 K/
Material	HYDR. SCHEDULE BOOM			CAD
Atlas Copco	Scale 1:1	Fam	2	Compare
	Drawn UTUFU	Blank		Replaces
	Std.chd.	Blk.wt. kg	Fin.wt. kg	Designation 3128 3188 62
Transferred from	Design chd.	Prod.chd.	Appd.	Date 07-02-02

Org.owner: TMG

Sheet 1 (1)

Note	Position	Modified from	Date	Intr.
0	.	.	.	.

. . Appurtenant drawings and documents

This document is our property and shall not without our permission be altered, copied, used for manufacturing or communicated to any other person or company.

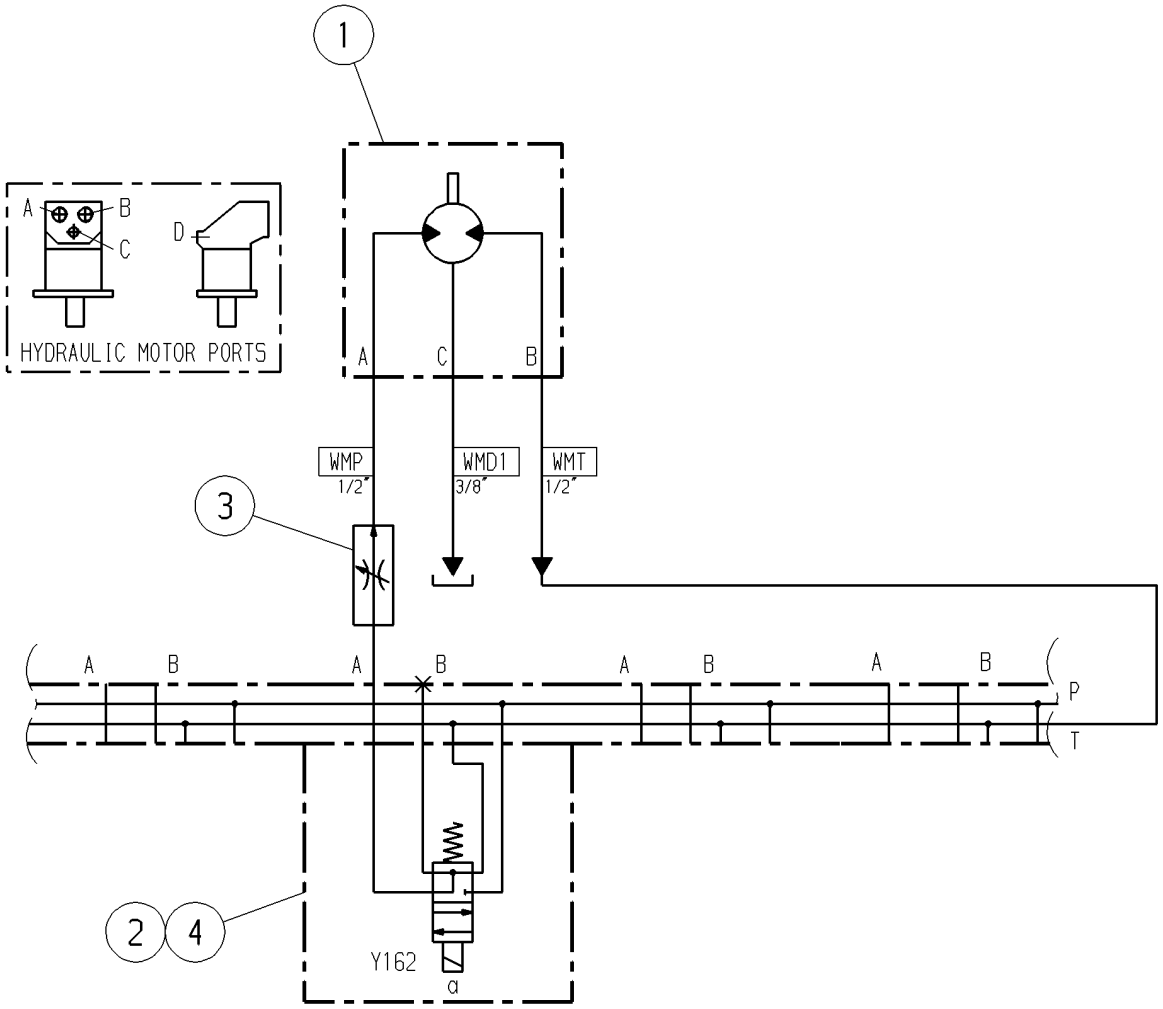

HOSES MUST RELATE TO THE FOLLOWING DEMANDS

DIN 20022 1SN: C
DIN 20022 2SN: _
DIN 20023 4SP: E

Ex: HOSE 1" E

HYDRAULIC HOSES TYPE
DIN 20022 2SN
UNLESS OTHERWISE STATED

Pos.	Designation	Number	Name	Material

Tolerances, if not indicated, according to: ATLAS COPCO STANDARD / Class

Machined surfaces: 1350 K / .

Name: HYDRAULSCHEMA/ HYDRAULIC SCHEDULE

Material: VATTENPUMP/ WATER PUMP

Secrecy class: 1102 K/ .

CAD

Scale: 1:1 | Fam: . | 3 | Compare: . | Drg.owner: TMG

Drawn: AVOBFK | Blank: . | Replaces: .

Transferred from: . | Std.chd.: . | Blk.wt.: . kg | Fin.wt.: . kg

Design chd.: . | Prod.chd.: . | Appd.: . | Date: 070929

Designation: 3217 7816 59 | Sheet 1 (1)

Note	Position	Modified from	Date	Intr.
0	.	.	.	.

Appurtenant drawings and documents: . .

This document is our property and shall not without our permission be altered, copied, used for manufacturing or communicated to any other person or company.

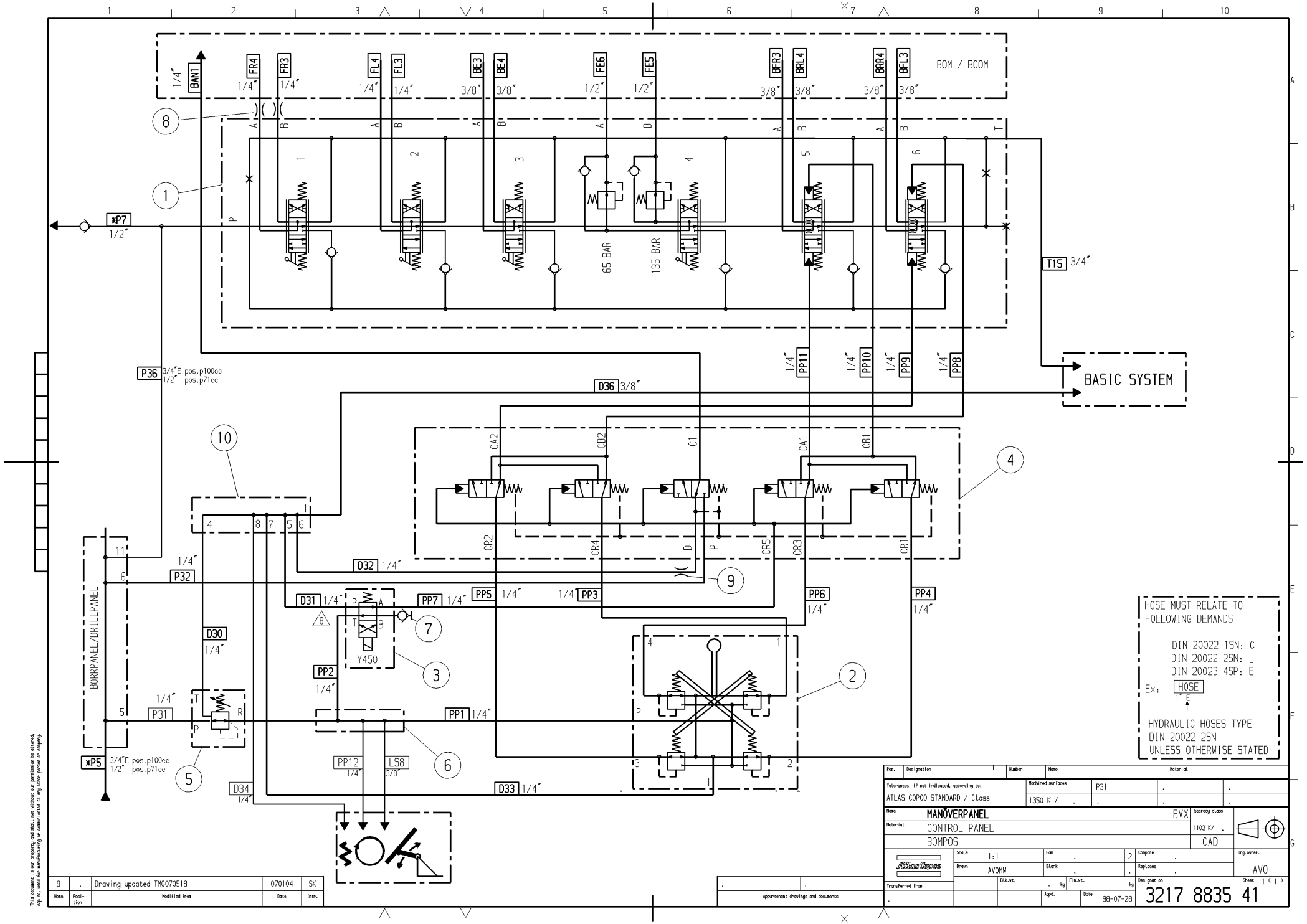

This document is our property and shall not without our permission be altered, copied, used for manufacturing or communicated to any other person or company.

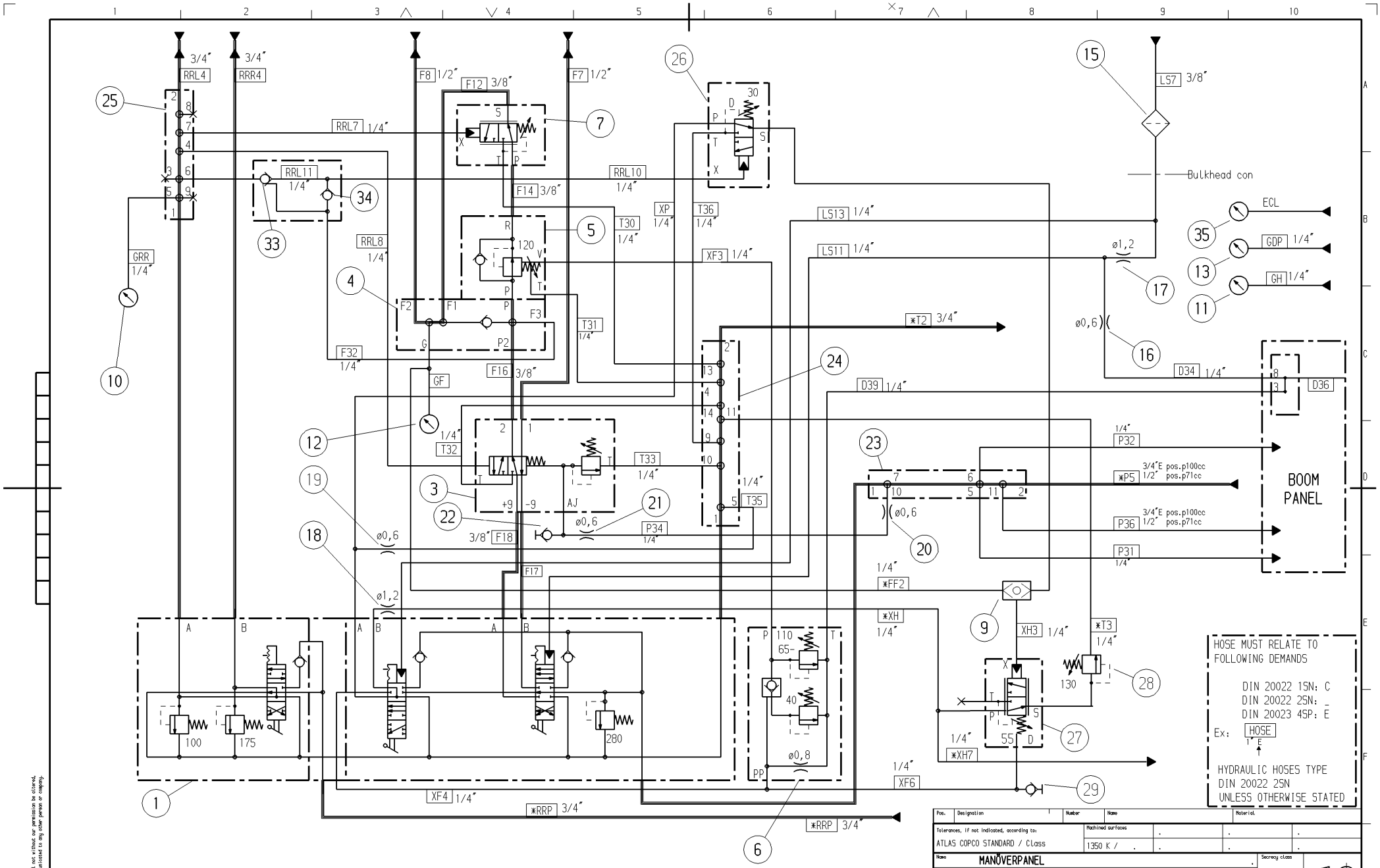

This document is our property and shall not without our permission be altered, copied, used for manufacturing or communicated to any other person or company.

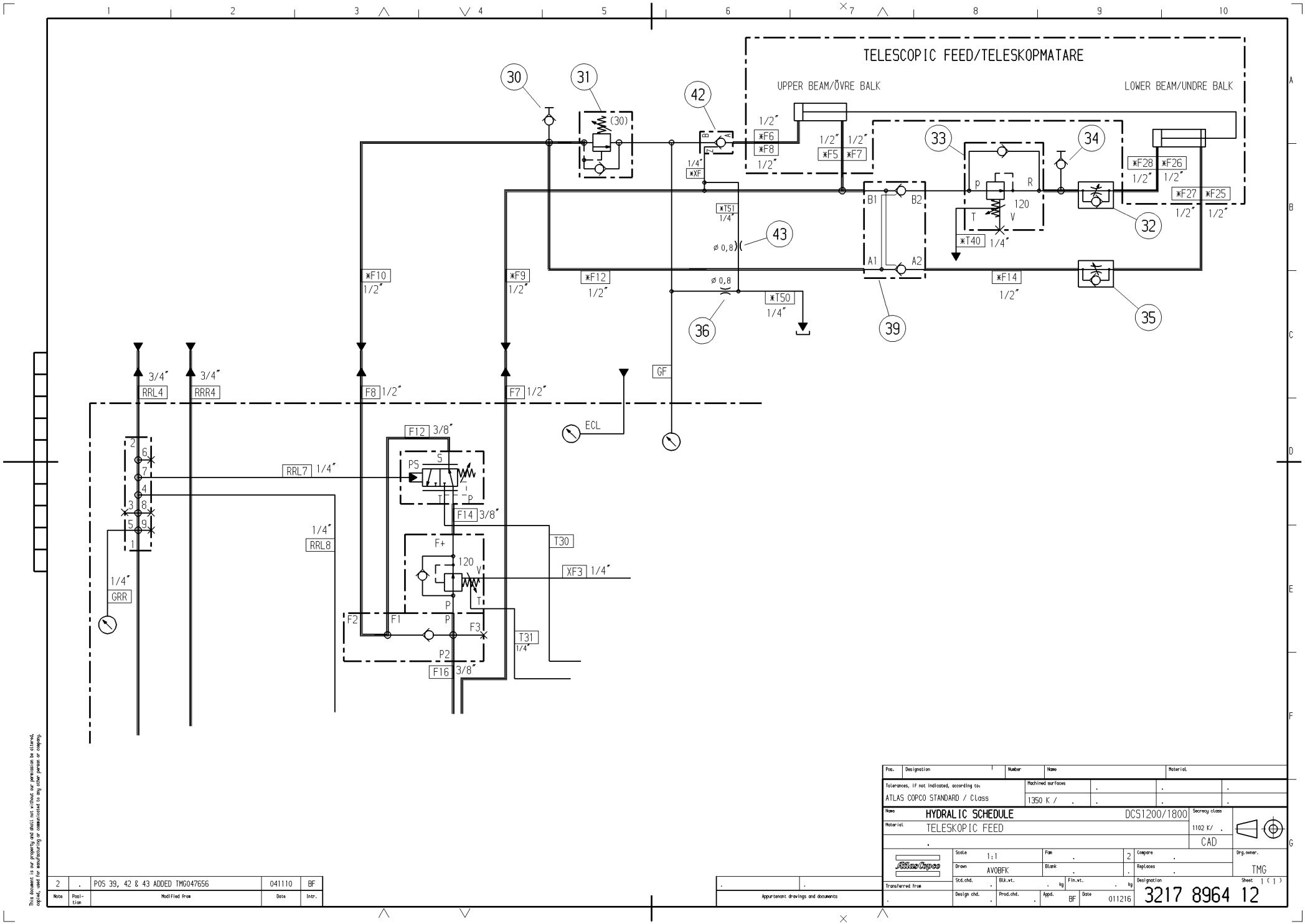
TELESCOPIC FEED/TELESKOPMATARE
UPPER BEAM/ÖVRE BALK
LOWER BEAM/UNDRE BALK
30
31
(30)
42
43
36
39
33
34
32
35
*F6
*F8
*F5
*F7
*F28
*F26
*F27
*F25
*XF
*T51
*T40
*T50
*F10
*F9
*F12
*F14
ø 0,8
B1
B2
A1
A2
P
R
T
V
120
GF
ECL
3/4"
RRL4
RRR4
F8 1/2"
F7 1/2"
F12 3/8"
PS
S
T
P
RRL7 1/4"
F14 3/8"
1/4"
RRL8
F+
T30
XF3 1/4"
GRR
F2
F1
F3
P2
T31
F16 3/8"
This document is our property and shall not without our permission be altered, copied, used for manufacturing or communicated to any other person or company.
2 . POS 39, 42 & 43 ADDED TMG047656 041110 BF
Note Position Modified from Date Intr.
Appurtenant drawings and documents
Pos. Designation Number Name Material
Tolerances, if not indicated, according to: ATLAS COPCO STANDARD / Class
Machined surfaces 1350 K /
Name HYDRALIC SCHEDULE DCS1200/1800
Material TELESKOPIC FEED
Secrecy class 1102 K/ CAD
Scale 1:1
Drawn AVOBFK
Fam 2
Blank
Compare
Replaces
Drg.owner. TMG
Transferred from
Std.chd.
Blk.wt. kg
Fin.wt. kg
Design chd.
Prod.chd.
Appd. BF
Date 011216
Designation 3217 8964 12
Sheet 1 (1)

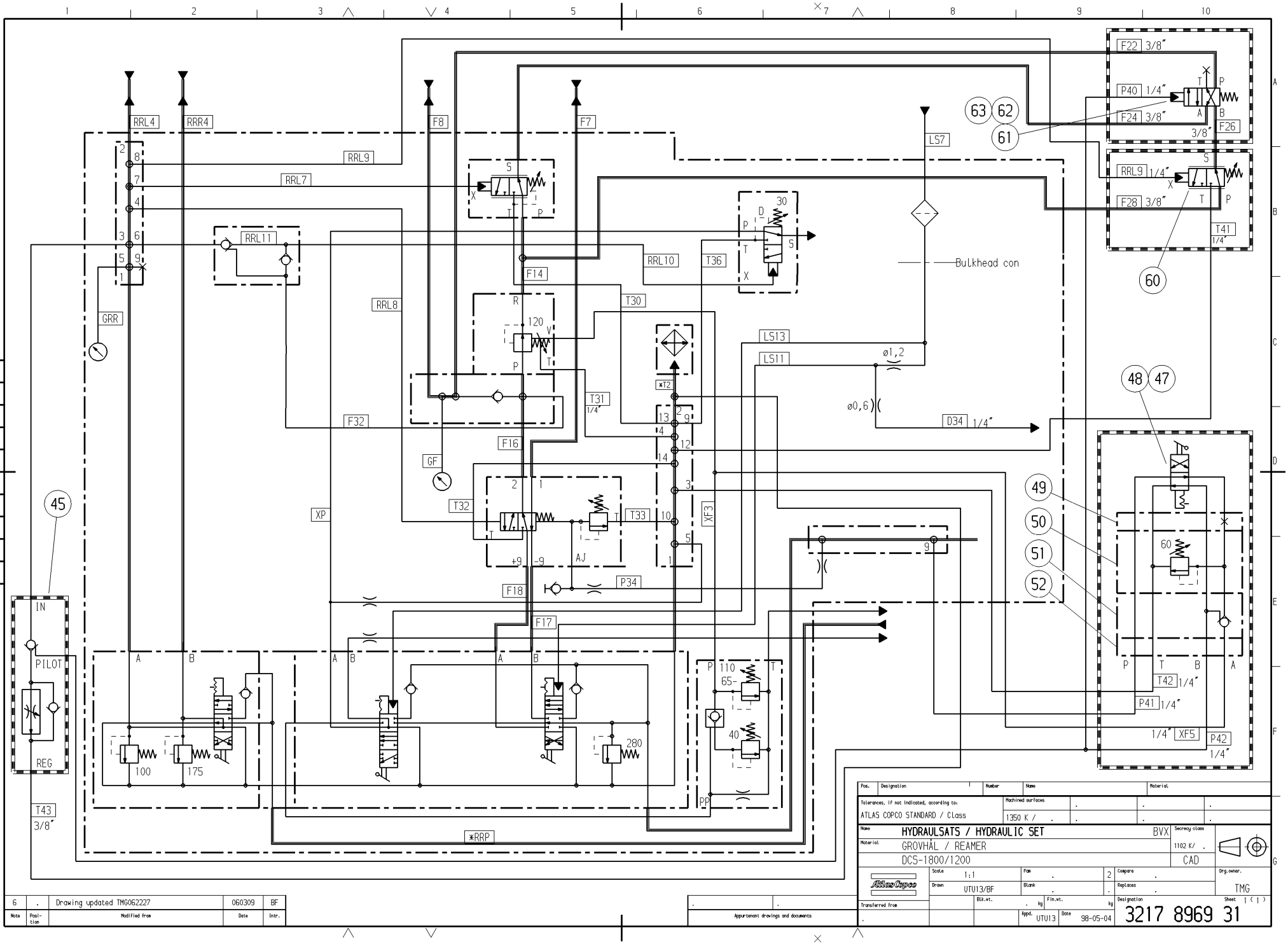

Pos.	Designation	Number	Name	Material

Tolerances, if not indicated, according to: ATLAS COPCO STANDARD / Class
Machined surfaces: 1350 K / .

Name: HYDRAULSATS / HYDRAULIC SET — BVX — Secrecy class: 1102 K/ .
Material: GROVHÅL / REAMER — CAD
DCS-1800/1200

Scale 1:1 | Fam . | 2 | Compare .
Drawn UTU13/BF | Blank . | Replaces .
Drg.owner. TMG
Transferred from . | Blk.wt. . kg | Fin.wt. . kg
Appd. UTU13 | Date 98-05-04
Designation 3217 8969 31 | Sheet 1 (1)

Note	Position	Modified from	Date	Intr.
6	.	Drawing updated TMG062227	060309	BF

. | . Appurtenant drawings and documents

This document is our property and shall not without our permission be altered, copied, used for manufacturing or communicated to any other person or company.

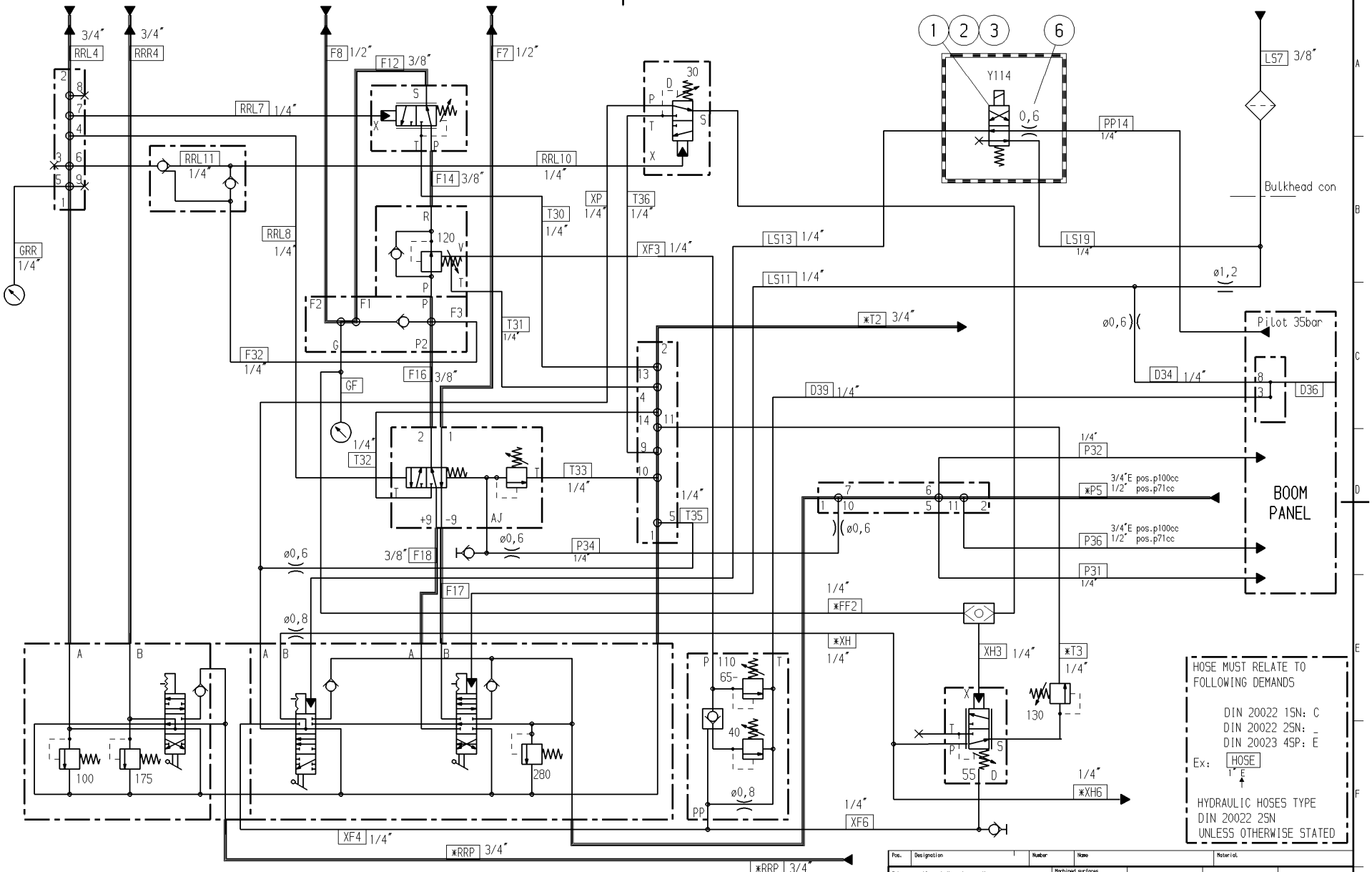

Pos.	Designation	Number	Name	Material
Tolerances, if not indicated, according to: ATLAS COPCO STANDARD / Class		Machined surfaces 1350 K /		
Name	SPOLVATTENÖVERVAKNING		Secrecy class 1102 K/	
Material	WATER FLOW SENSOR			
	DCS-1800		CAD	
Scale 1:1	Fam	2	Compare	Drg.owner TMG
Drawn AVOBFK	Blank		Replaces	
Std.chd.	Blk.wt. kg	Fin.wt. kg	Designation 3217 8988 30	Sheet 1 (1)
Transferred from	Design chd.	Prod.chd.	Appd. BF Date 060309	

Note	Position	Modified from	Date	Intr.
4	.	Drawing updated TMG070518	070105	BF

Appurtenant drawings and documents

This document is our property and shall not without our permission be altered, copied, used for manufacturing or communicated to any other person or company.

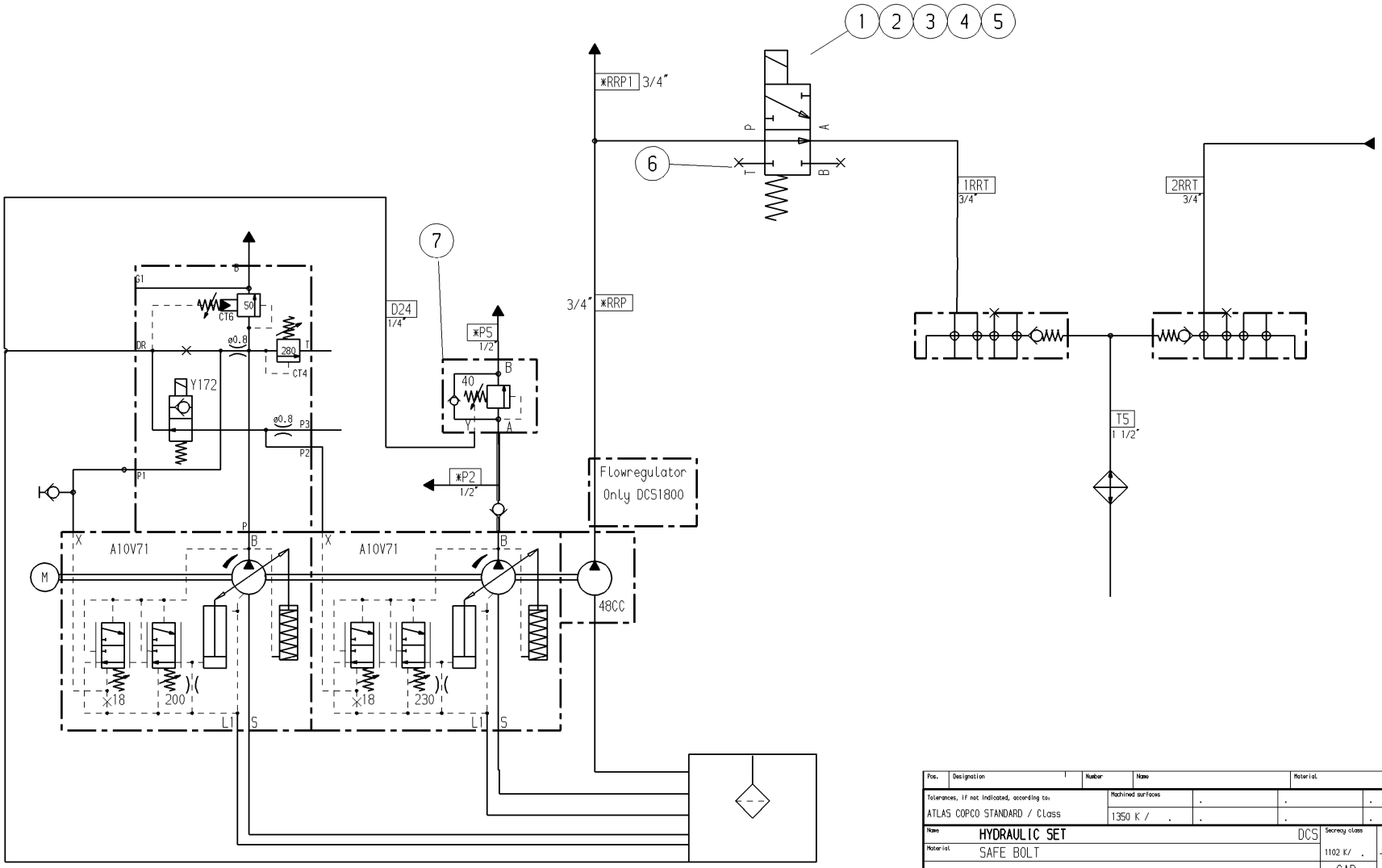

Pos.	Designation	Number	Name	Material
	Tolerances, if not indicated, according to: ATLAS COPCO STANDARD / Class	Machined surfaces 1350 K /		
	Name HYDRAULIC SET			DCS
	Material SAFE BOLT			Secrecy class 1102 K/ CAD
	Scale 1:1	Fam	2	Compare
	Drawn UTUK01	Blank		Replaces
	Blk.wt. kg	Fin.wt. kg		Drg.owner. TMG
	Transferred from	Appd. AVOBFK	Date 01-01-09	Designation 3217 9984 51
				Sheet 1 (2)

Note	Position	Modified from	Date	Intr.
3	.	Drawing updated TMG057170	051013	BF
2	.	Designations changed on valve 7	050407	BF

. . Appurtenant drawings and documents

This document is our property and shall not without our permission be altered, copied, used for manufacturing or communicated to any other person or company.

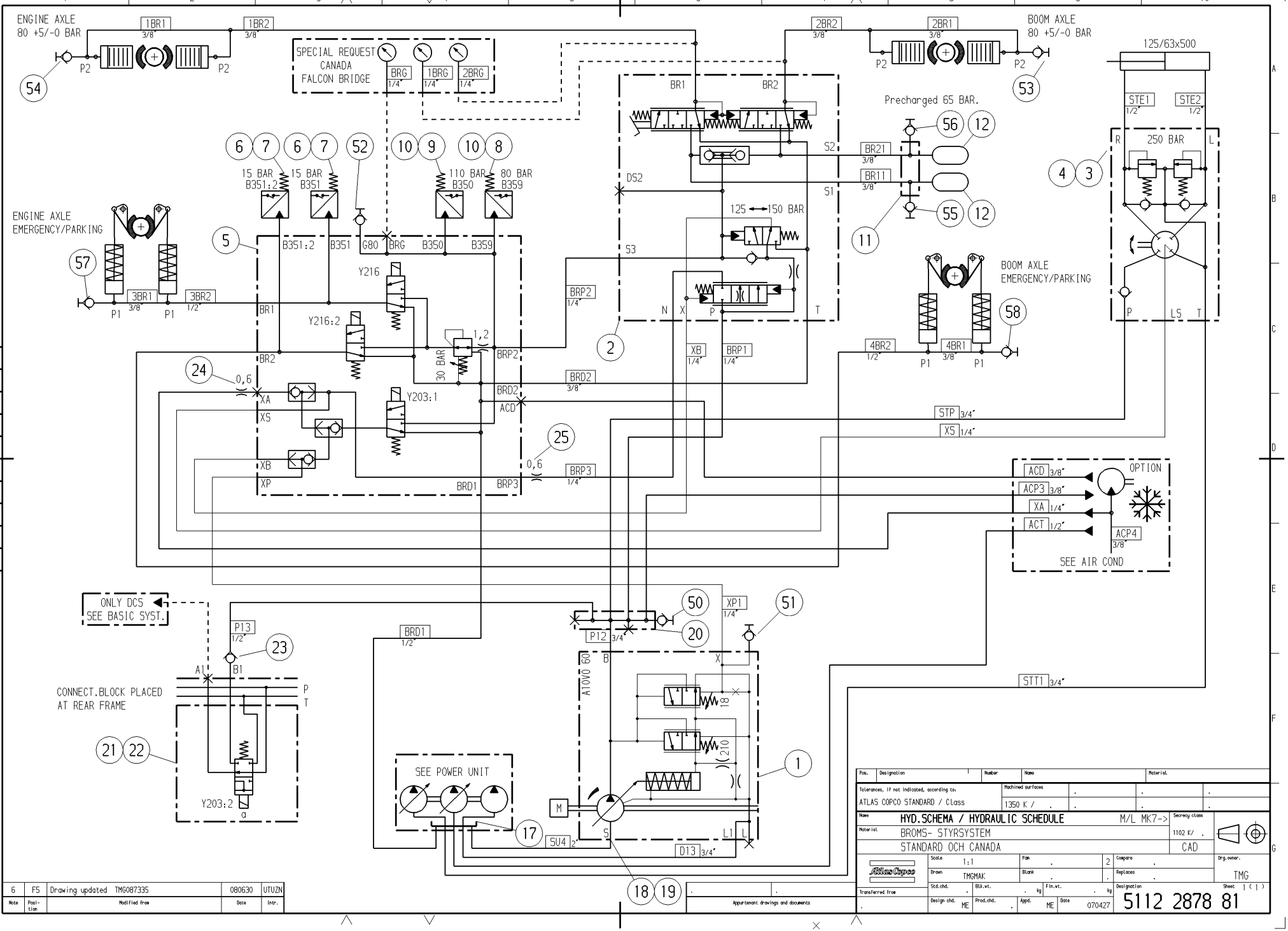
ENGINE AXLE
80 +5/-0 BAR
1BR1
1BR2
SPECIAL REQUEST
CANADA
FALCON BRIDGE
BRG
1BRG
2BRG
BOOM AXLE
80 +5/-0 BAR
2BR2
2BR1
125/63x500
STE1
STE2
250 BAR
Precharged 65 BAR.
BR21
BR11
125 ⟷ 150 BAR
15 BAR
B351:2
15 BAR
B351
110 BAR
B350
80 BAR
B359
ENGINE AXLE
EMERGENCY/PARKING
3BR1
3BR2
Y216
Y216:2
Y203:1
30 BAR
BRP2
BRD2
BRP3
BRD1
XB
BRP1
BOOM AXLE
EMERGENCY/PARKING
4BR2
4BR1
STP
XS
ACD
ACP3
XA
ACT
ACP4
OPTION
SEE AIR COND
ONLY DCS
SEE BASIC SYST.
P13
CONNECT.BLOCK PLACED
AT REAR FRAME
Y203:2
SEE POWER UNIT
XP1
P12
A10VO 60
SU4
D13
STT1
Pos.
Designation
Number
Name
Material
Tolerances, if not indicated, according to:
ATLAS COPCO STANDARD / Class
Machined surfaces
1350 K /
Name
HYD.SCHEMA / HYDRAULIC SCHEDULE
M/L MK7->
Material
BROMS- STYRSYSTEM
STANDARD OCH CANADA
Secrecy class
1102 K/
CAD
Scale
1:1
Drawn
TMGMAK
Drg.owner.
TMG
Transferred from
Design chd.
ME
Appd.
ME
Date
070427
Designation
5112 2878 81
Sheet
1 (1)
Appurtenant drawings and documents
6
F5
Drawing updated TMG087335
080630
UTUZN
Note
Position
Modified from
Date
Intr.
This document is our property and shall not without our permission be altered, copied, used for manufacturing or communicated to any other person or company.

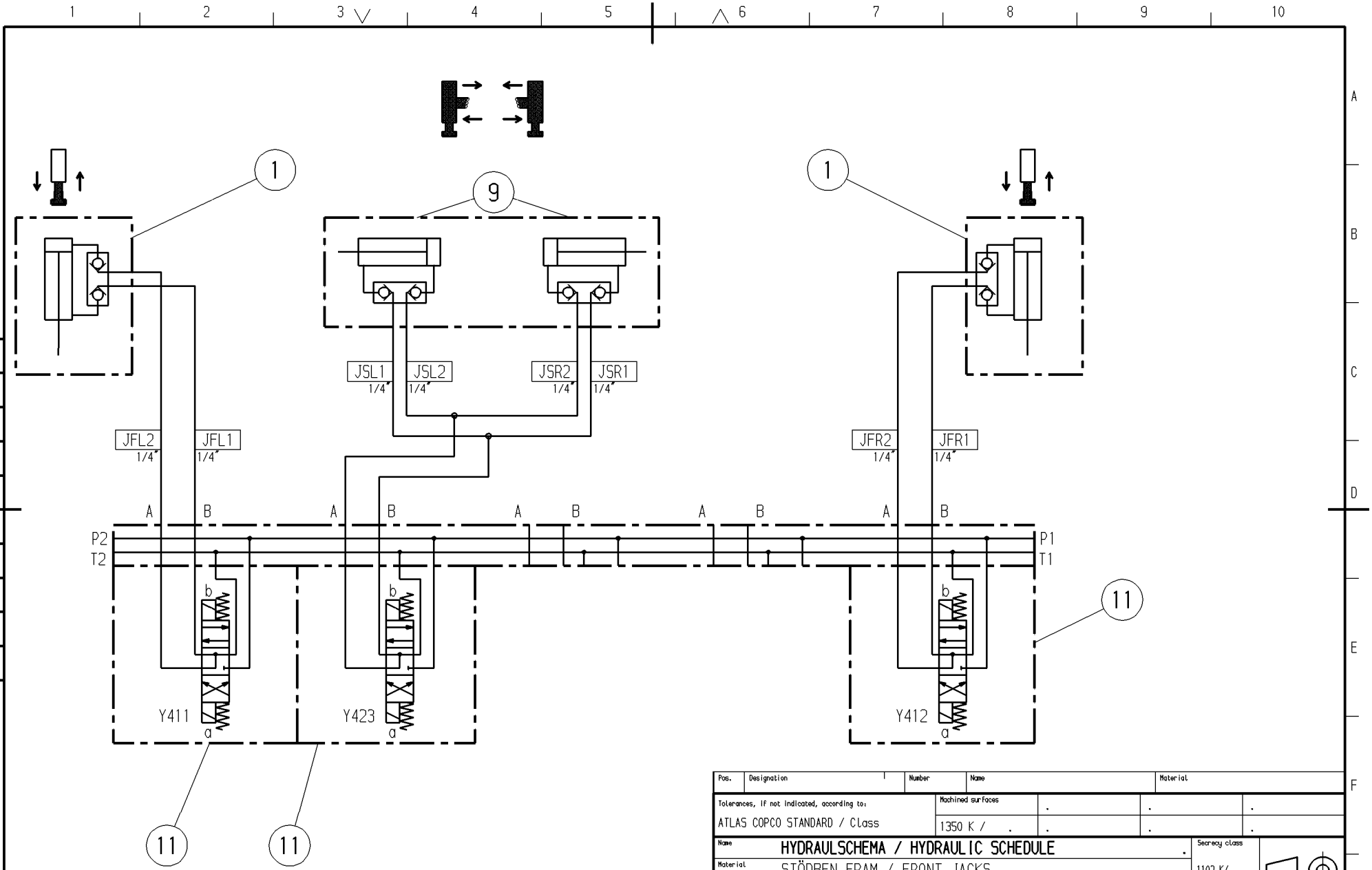

Pos.	Designation	Number	Name	Material

Tolerances, IF not indicated, according to:	Machined surfaces			
ATLAS COPCO STANDARD / Class	1350 K / .	.	.	.

Name	HYDRAULSCHEMA / HYDRAULIC SCHEDULE	Secrecy class	
Material	STÖDBEN FRAM / FRONT JACKS	1102 K/ .	
		CAD	

Scale	1:1	Fam	.	3	Compare	.	Drg.owner.
Drawn	TMGNO/NÖ	Blank	.	.	Replaces	.	TME
Transferred from		Blk.wt.	. kg	Fin.wt.	kg	Designation	Sheet 1 (1)
.			Appd.	Date	98-08-13	9106 1118 53	

Note	Position	Modified from	Date	Intr.
5	.	Ventilplac omflyttad, P* T* infört TMG072935	070320	BF

.	.
Appurtenant drawings and documents	

This document is our property and shall not without our permission be altered, copied, used for manufacturing or communicated to any other person or company.

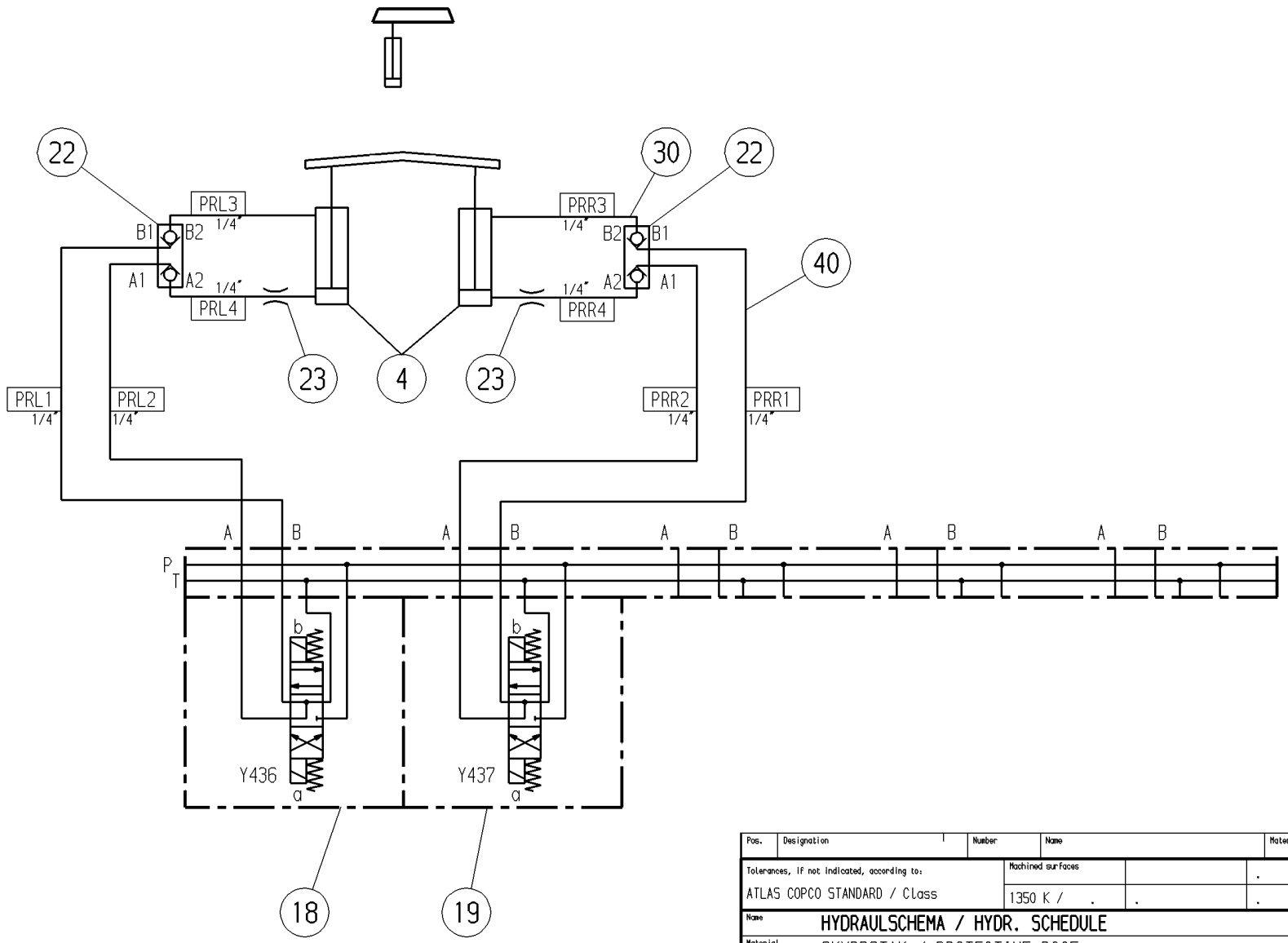

Pos.	Designation	Number	Name	Material

Tolerances, IF not indicated, according to:	Machined surfaces			
ATLAS COPCO STANDARD / Class	1350 K / .	.	.	.

Name	HYDRAULSCHEMA / HYDR. SCHEDULE	Secrecy class
Material	SKYDDSTAK / PROTECTIVE ROOF	1102 K/ .
		CAD

Scale	1:1	Fam	.	3	Compare	.	Drg.owner.
Drawn	TMGNO/NÖ	Blank	.	.	Replaces	.	TMG
Transferred from		Blk.wt.	. kg	Fin.wt.	kg	Designation	Sheet 1 (1)
.			Appd. NÖ	Date 97-08-18		9106 1296 52	

Note	Posi-tion	Modified from	Date	Intr.
6	.	POS 30 OCH 40 TILLKOM	99-05-05	SJ
5	.	DRAWING UPDATED TMG 985062	98-12-03	SK

.	.
Appurtenant drawings and documents	

This document is our property and shall not without our permission be altered, copied, used for manufacturing or communicated to any other person or company.

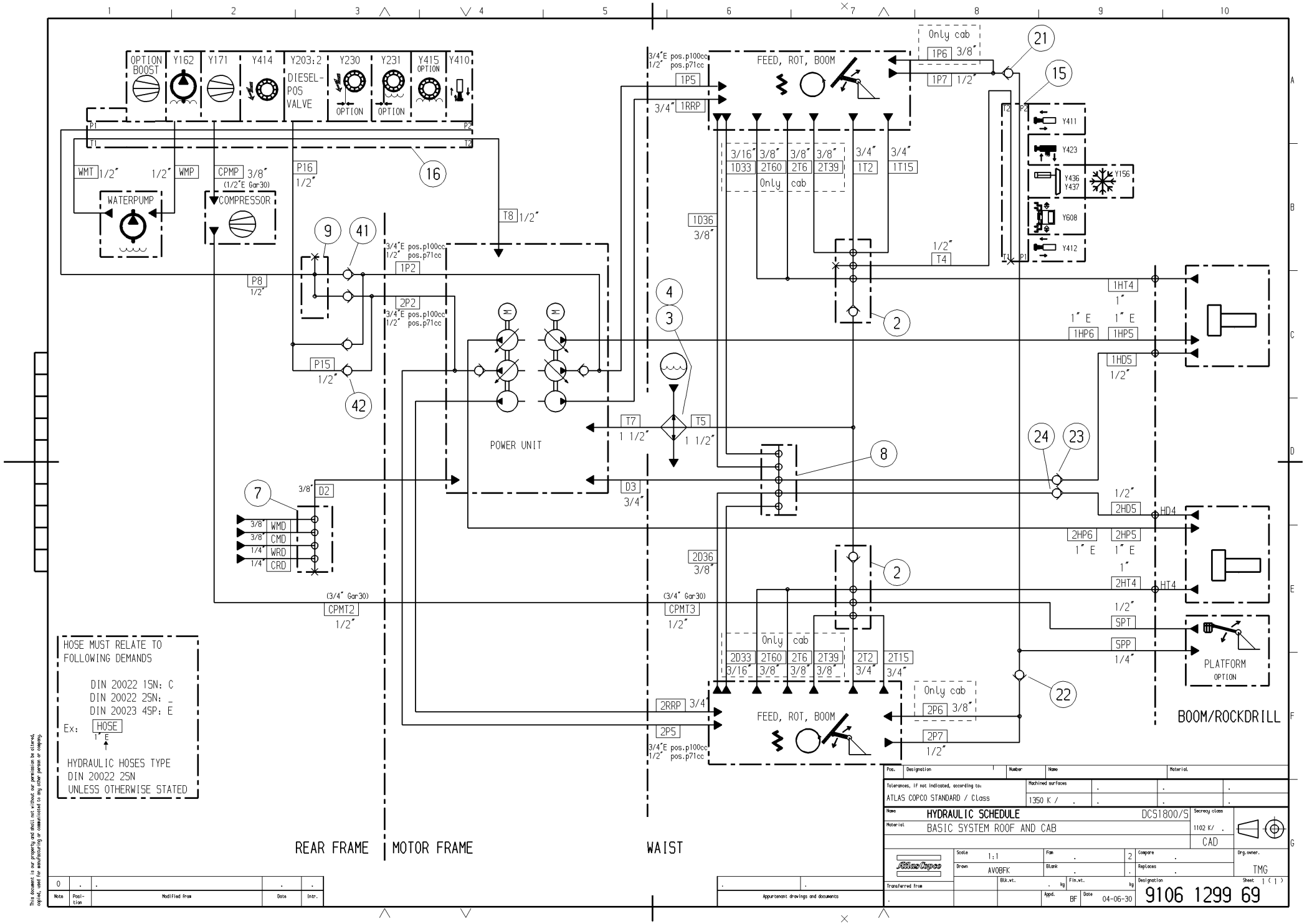

This document is our property and shall not without our permission be altered, copied, used for manufacturing or communicated to any other person or company.

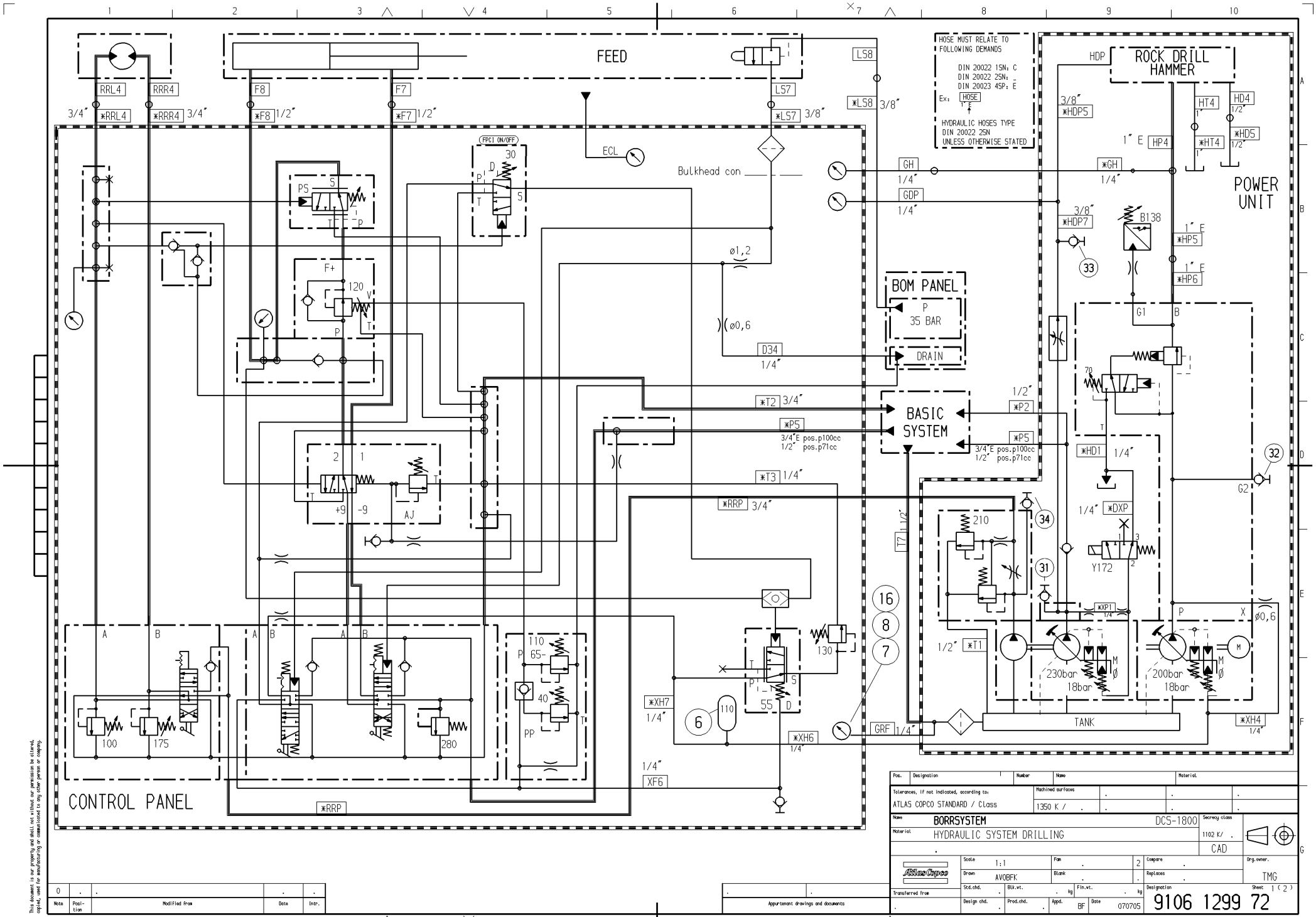
FEED
ROCK DRILL HAMMER
POWER UNIT
BOM PANEL
BASIC SYSTEM
CONTROL PANEL
HOSE MUST RELATE TO FOLLOWING DEMANDS
DIN 20022 1SN: C
DIN 20022 2SN: _
DIN 20023 4SP: E
Ex: HOSE
HYDRAULIC HOSES TYPE DIN 20022 2SN UNLESS OTHERWISE STATED
FPCI ON/OFF
Bulkhead con
ECL
TANK
230bar 18bar
200bar 18bar
Y172
B138
Tolerances, if not indicated, according to: ATLAS COPCO STANDARD / Class
Machined surfaces 1350 K /
Name BORRSYSTEM DCS-1800
Material HYDRAULIC SYSTEM DRILLING
Secrecy class 1102 K/
CAD
Scale 1:1
Drawn AVOBFK
Drg.owner. TMG
Sheet 1 (2)
Designation 9106 1299 72
Date 070705
Appurtenant drawings and documents
Modified from
This document is our property and shall not without our permission be altered, copied, used for manufacturing or communicated to any other person or company.

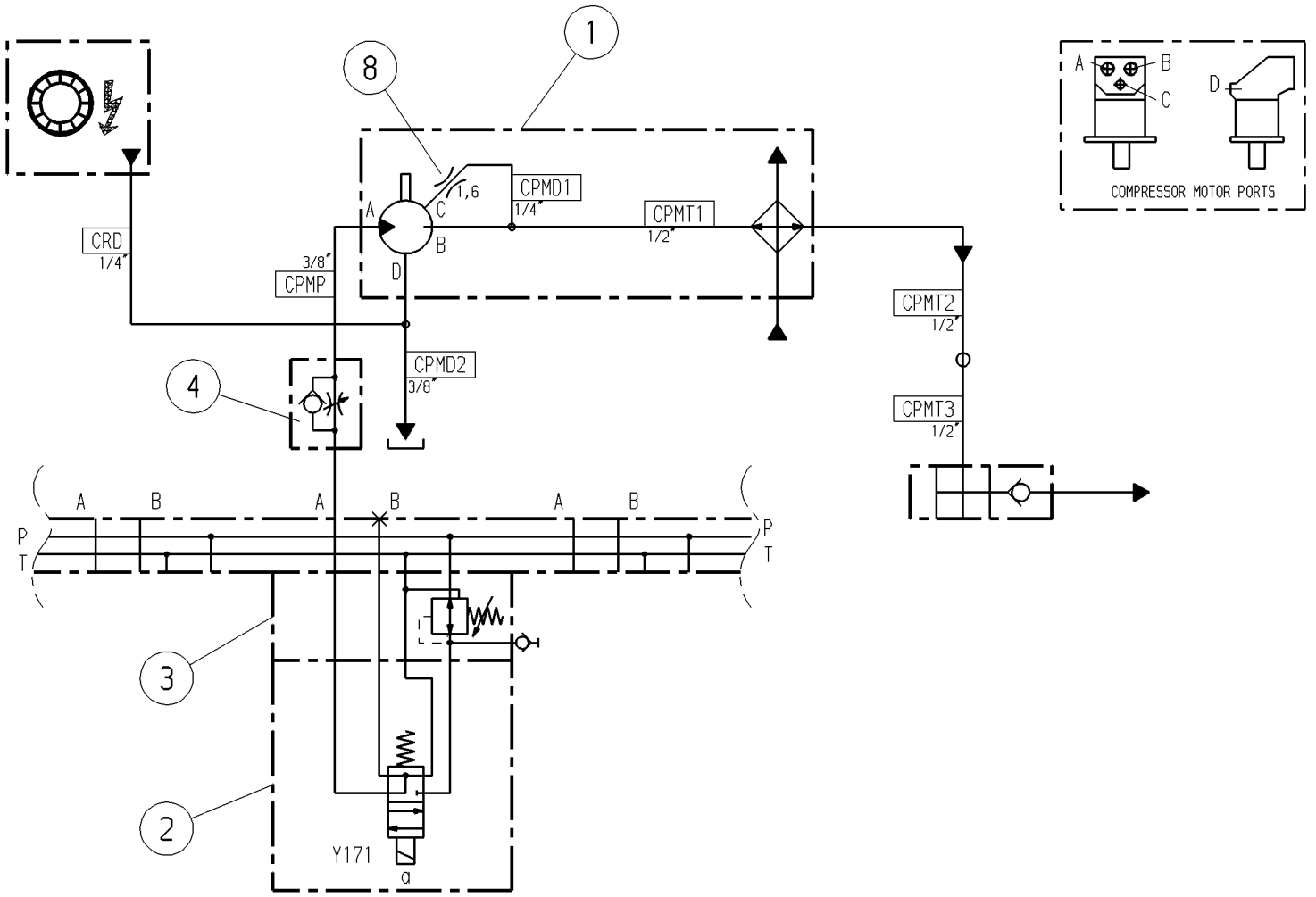

Pos.	Designation	Number	Name	Material

Tolerances, IF not indicated, according to:	Machined surfaces			
ATLAS COPCO STANDARD / Class	1350 K / .	.	.	.

Name	HYDRAULIC SCHEDULE	L2D/M2D	Secrecy class	
Material	COMPRESSOR		1102 K/ .	
	OIL COOLED		CAD	

Atlas Copco	Scale 1:1	Fam .	3	Compare .	Drg.owner. TMG
	Drawn AVOSNK	Blank .	.	Replaces .	
Transferred from .		Blk.wt. . kg	Fin.wt. kg	Designation 9106 1437 25	Sheet 1 (1)
			Appd. UTU13	Date 99-10-13	

Note	Posi-tion	Modified from	Date	Intr.
5	.	Title block updated	070207	BF

.	.
Appurtenant drawings and documents	

This document is our property and shall not without our permission be altered, copied, used for manufacturing or communicated to any other person or company.

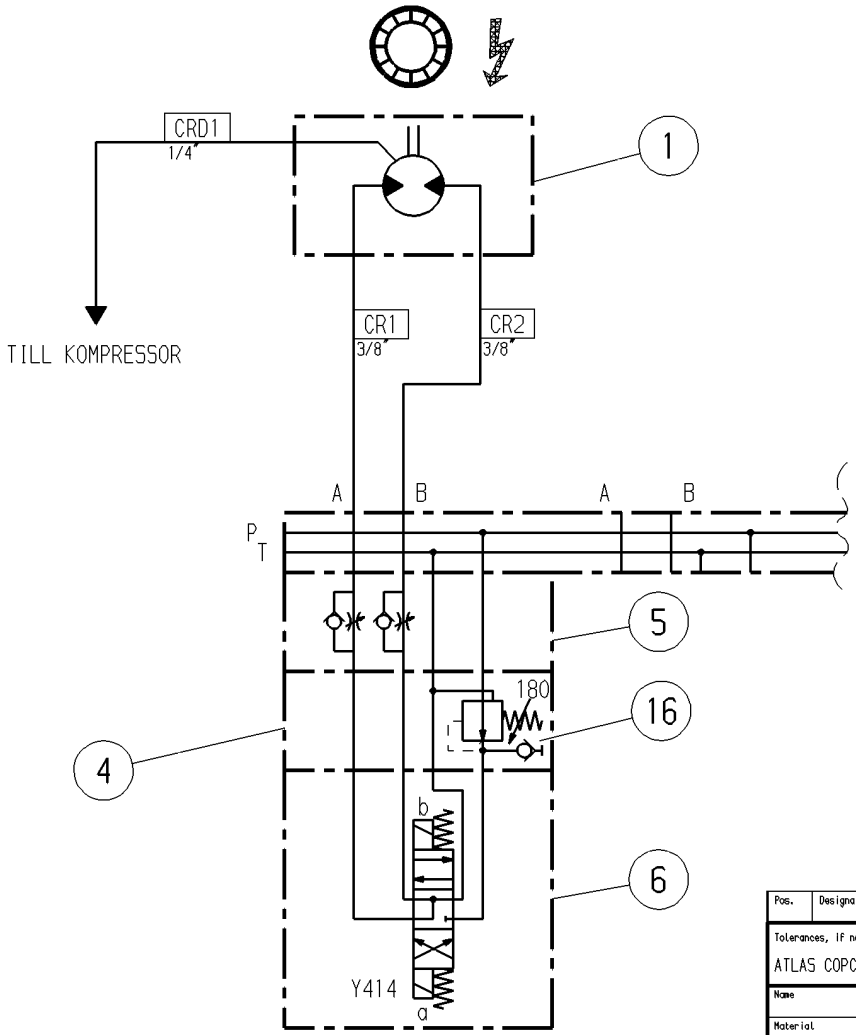

Pos.	Designation	Number	Name	Material

Tolerances, IF not indicated, according to:	Machined surfaces			
ATLAS COPCO STANDARD / Class	1350 K / .	.	.	.

Name	HYDRAULSCHEMA / HYDR. SCHEDULE	Secrecy class	
Material	KABELVINDA / CABLE REEL	1102 K/ .	
		CAD	

Scale	1:1	Fam	.	3	Compare	.	Drg.owner.
Drawn	AVOSNK	Blank	.	.	Replaces	.	TMG
Transferred from		Blk.wt.	. kg	Fin.wt.	kg	Designation	Sheet 1 (1)
.			Appd.	Date	99-08-02	9106 1509 83	

Note	Position	Modified from	Date	Intr.
1	.	TEXT INLAGD TMG 035476	03-10-02	Å.H.

Appurtenant drawings and documents	
.	.

This document is our property and shall not without our permission be altered, copied, used for manufacturing or communicated to any other person or company.

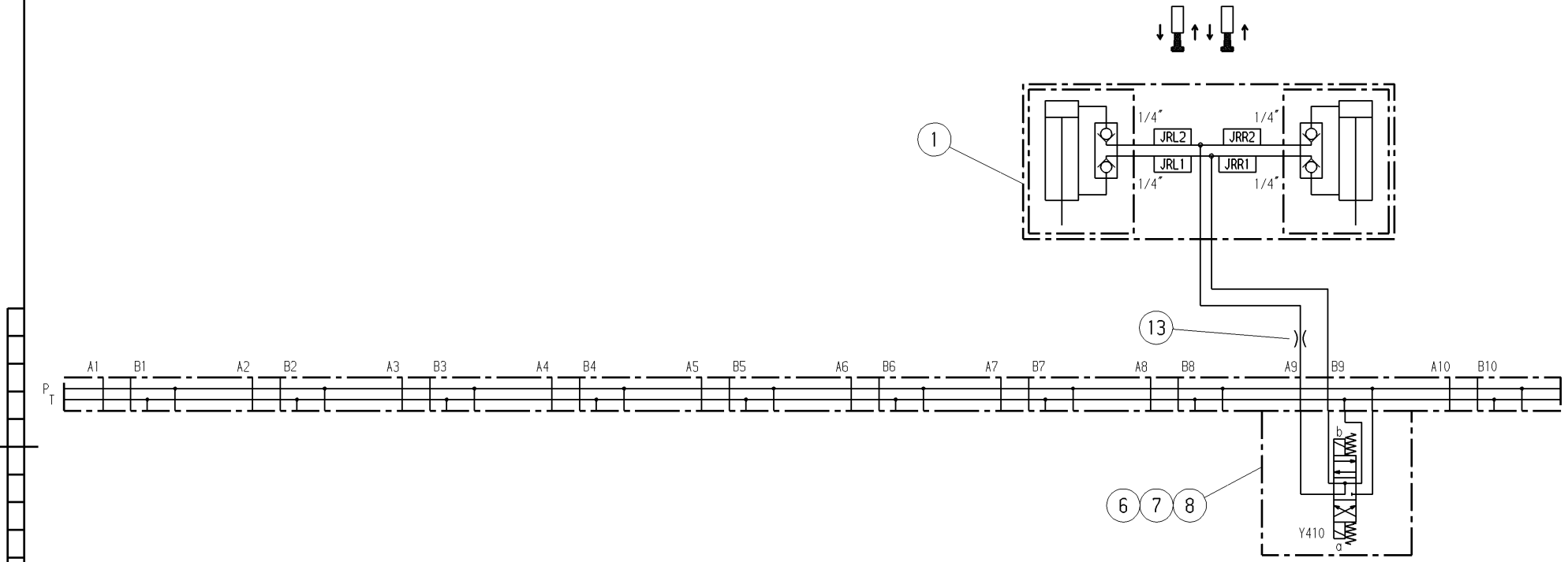

Pos.	Designation	Number	Name	Material
Tolerances, if not indicated, according to: ATLAS COPCO STANDARD / Class		Machined surfaces 1350 K / .	.	.
Name: HYDRAULIC SCHEDULE L/M1C, L/M2C				Secrecy class 1102 K/ .
Material: REAR JACKS				CAD

Scale 1:1	Fam .	2	Compare .	Drg.owner. TMG
Drawn UTUZN	Blank .		Replaces .	
Std.chd. .	Blk.wt. . kg	Fin.wt. . kg	Designation 9106 1563 02	Sheet 1 (1)
Transferred from .	Design chd. .	Prod.chd. .	Appd. UTUZN Date 061124	

Appurtenant drawings and documents: . .

Note	Position	Modified from	Date	Intr.
3	.	Y410 moved from place 7 to 9 TMG069331	061124	UTUZN

This document is our property and shall not without our permission be altered, copied, used for manufacturing or communicated to any other person or company.

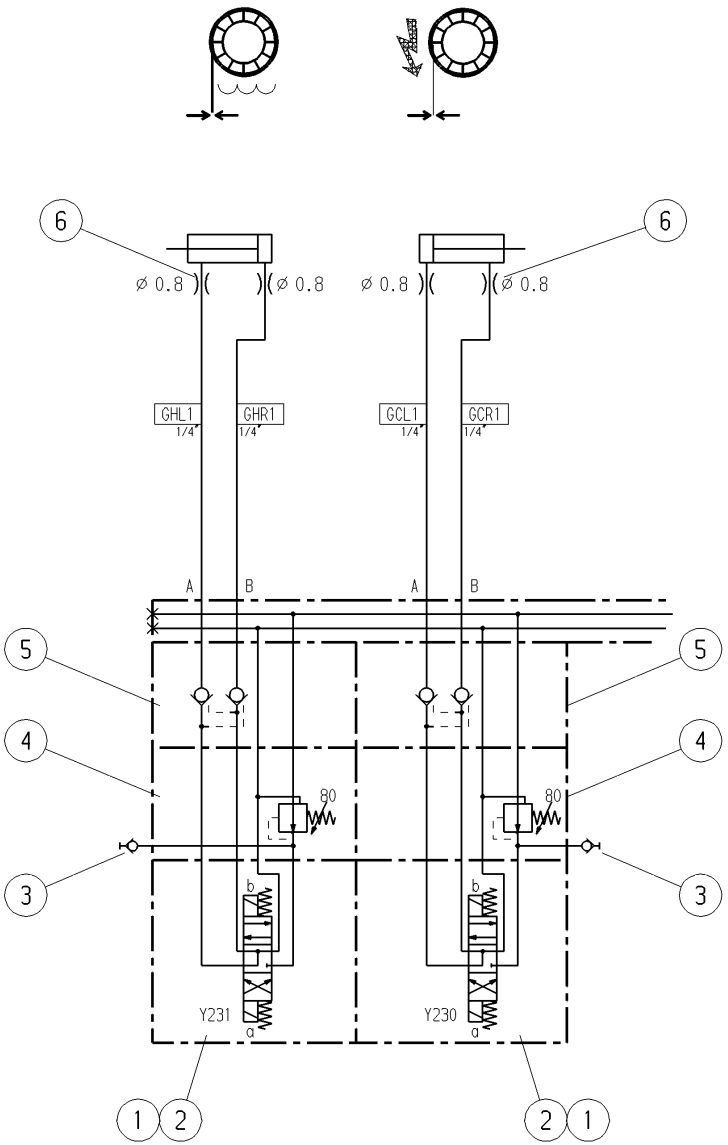

Pos.	Designation	Number	Name	Material
Tolerances, if not indicated, according to: ATLAS COPCO STANDARD / Class		Machined surfaces 1350 K / .	.	.
Name: HYDRAULIC SCHEDULE			L/M	Secrecy class: 1102 K/ .
Material: HOSE / CABLE GUIDE				CAD
Scale: 1:1	Fam: .	2	Compare: .	Drg.owner: TMG
Drawn: AVOBFK	Blank: .		Replaces: .	
Std.chd: .	Blk.wt: . kg	Fin.wt: . kg	Designation: 9106 1563 99	Sheet 1 (1)
Transferred from: .	Design chd: BF	Prod.chd: .	Appd: .	Date: 021028

Note	Position	Modified from	Date	Intr.
1	.	Hosemarks rewoved	070928	BF

. . Appurtenant drawings and documents

This document is our property and shall not without our permission be altered, copied, used for manufacturing or communicated to any other person or company.

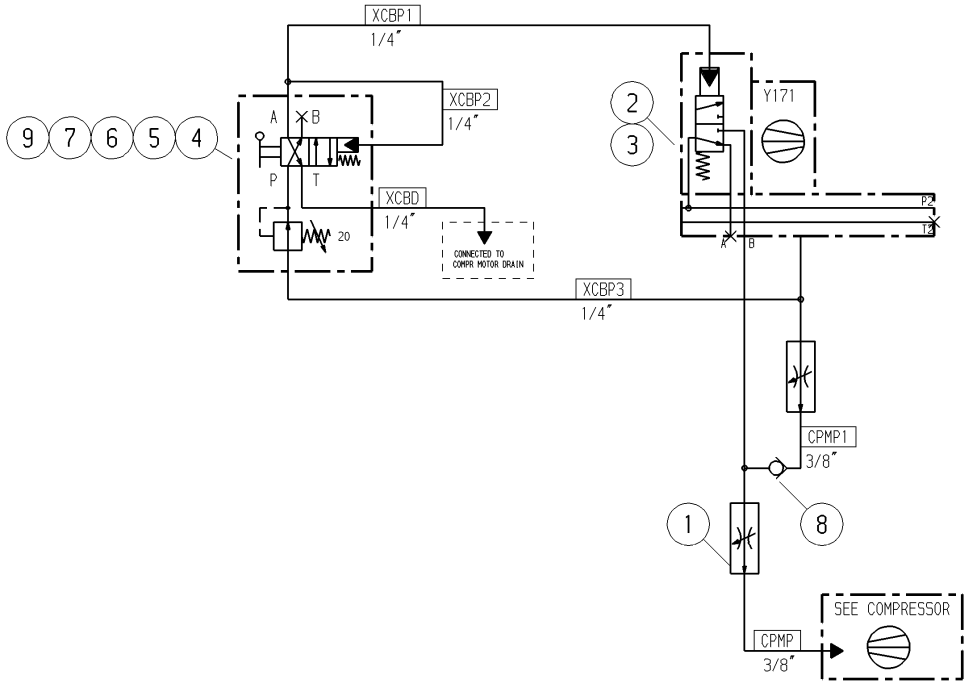

Pos.	Designation	Number	Name	Material
Tolerances, if not indicated, according to: ATLAS COPCO STANDARD / Class		Machined surfaces 1350 K / .	.	.
Name: HYDRAULIC SCHEDULE			L/M2D	Secrecy class 1102 K/ .
Material: COMPRESSOR BOOST				CAD
Scale 1:1	Fam .	2	Compare .	Drg.owner. TMG
Drawn AVOBFK	Blank .		Replaces .	
Transferred from .	Blk.wt. . kg	Fin.wt. kg	Designation 9106 1564 15	Sheet 1 (1)
		Appd. . Date 04-11-16		

Note	Position	Modified from	Date	Intr.
3	.	Drawing updated	080118	BF

. . Appurtenant drawings and documents

This document is our property and shall not without our permission be altered, copied, used for manufacturing or communicated to any other person or company.

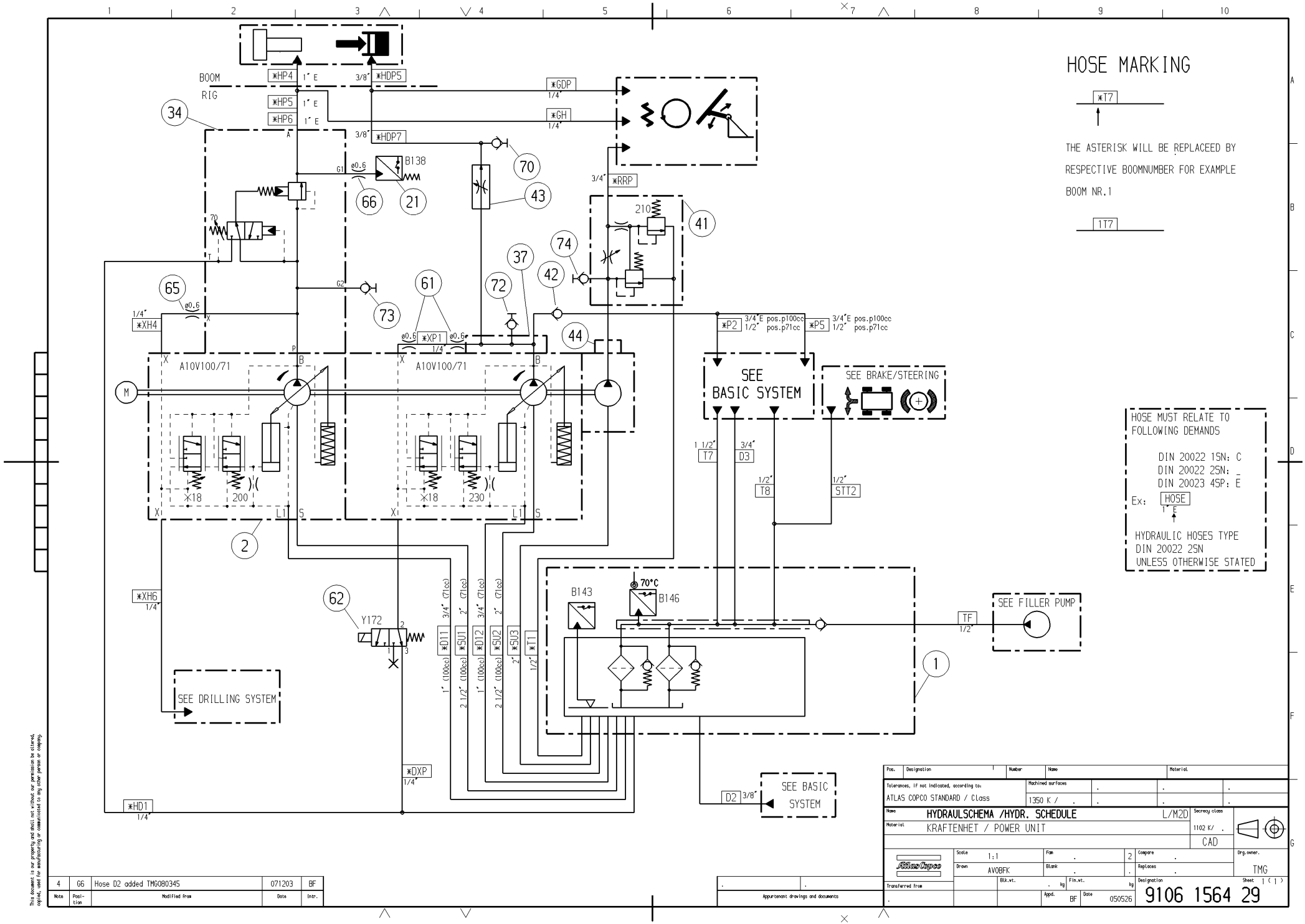

HOSE MARKING

*T7

THE ASTERISK WILL BE REPLACEED BY RESPECTIVE BOOMNUMBER FOR EXAMPLE BOOM NR.1

1T7

HOSE MUST RELATE TO FOLLOWING DEMANDS

DIN 20022 1SN: C
DIN 20022 2SN: _
DIN 20023 4SP: E

Ex: HOSE 1" E

HYDRAULIC HOSES TYPE DIN 20022 2SN UNLESS OTHERWISE STATED

Pos.	Designation	Number	Name	Material
Tolerances, if not indicated, according to: ATLAS COPCO STANDARD / Class		Machined surfaces 1350 K / .	.	.
Name	HYDRAULSCHEMA /HYDR. SCHEDULE	L/M2D	Secrecy class 1102 K/ .	
Material	KRAFTENHET / POWER UNIT		CAD	
Atlas Copco	Scale 1:1	Fam .	2	Compare .
Transferred from	Drawn AVOBFK	Blank .		Replaces .
	Blk.wt. . kg	Fin.wt. . kg		Drg.owner. TMG
	Appurtenant drawings and documents	Appd. BF	Date 050526	Designation 9106 1564 29
				Sheet 1 (1)

Note	Position	Modified from	Date	Instr.
4	G6	Hose D2 added TMG080345	071203	BF

This document is our property and shall not without our permission be altered, copied, used for manufacturing or communicated to any other person or company.

Overview: Dimension drawing

LIST OF CONTENTS

Art.no.	Description	Remarks	Page
9119255020	DIM. DRAWING	RISKAREA WORK	80
9119255021	DIM. DRAWING	RISKAREA TRANSPORT	81
9119258600	ASSEMBLY DWG	ASSEMBLY DWG.	82-85
9119258601	DIM. DRAWING	DIM. DRAWING	86
9119258602	COVERAGE AREA	COVERAGE AREA	87
9119258603	STROP INSTR.	STROP INSTR.	88-89

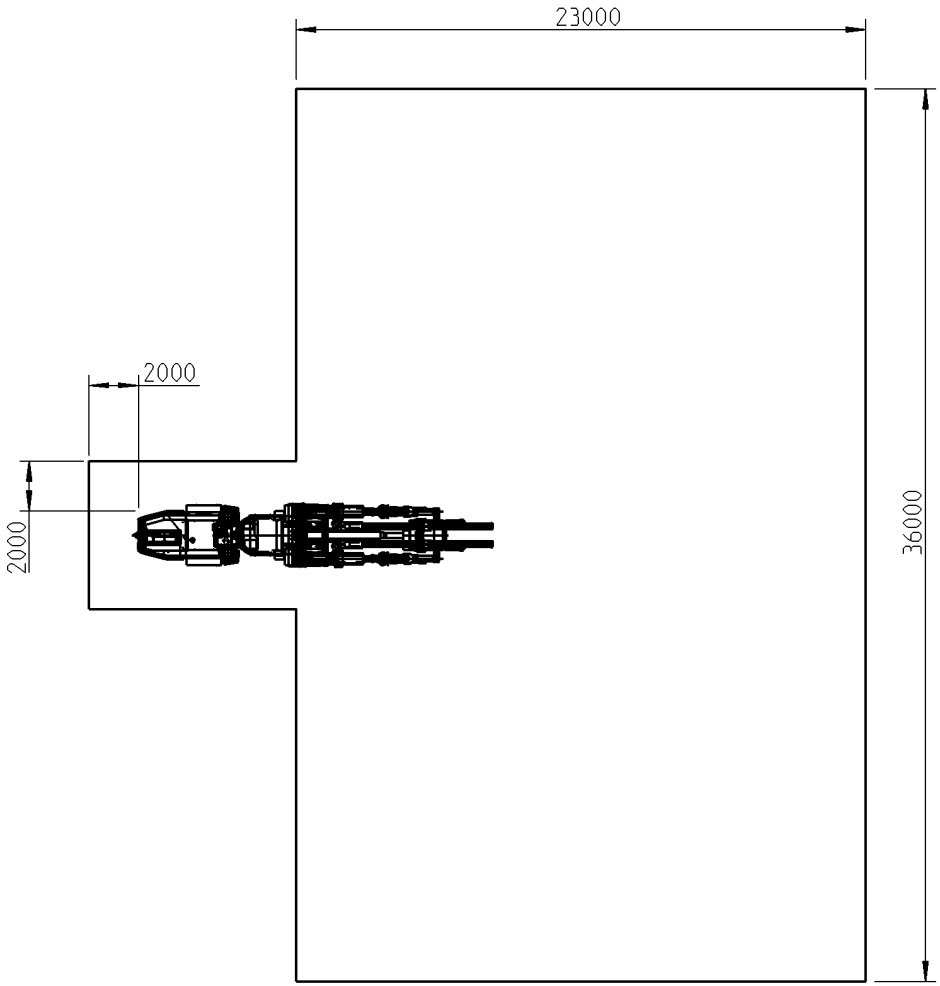

Model name	Rev	Ver
9119255020	2	0

Tolerances. If not indicated.	Machined surfaces	-	-	-	-
according to AC-STD:	1350 K / -	-	-	-	-

Name: Risk Area				RB E2/L2	Secrecy class: AC-STD 1102 K/
Material: Working					Pro/E
-					

Scale: 1:200	Fam	3	Compare: -	Drg.owner: TMG	
Drawn: AVOAFN	Blank	-	Replaces		
Std.chd.	Blk.wt. kg	Fin.wt. 0.0 kg	Designation: 9119255020	Sheet: 1(1)	
Transferred from	Design chd.	Prod.chd.	Appd. P Roth	Date 2003-10-17	

Rev.	Ver.	Posi-tion	Modified from	Date	Intr.	DM no.
2	0		Dim. 23000 and 36000 was 21000 and 32000	2006-07-03	PR	TMG065413

Property of Atlas Copco Rock Drills AB. Any unauthorized use or copying of this document or any part thereof is prohibited.

Obj	Model name	Rev	Ver
	9119255021	1	0

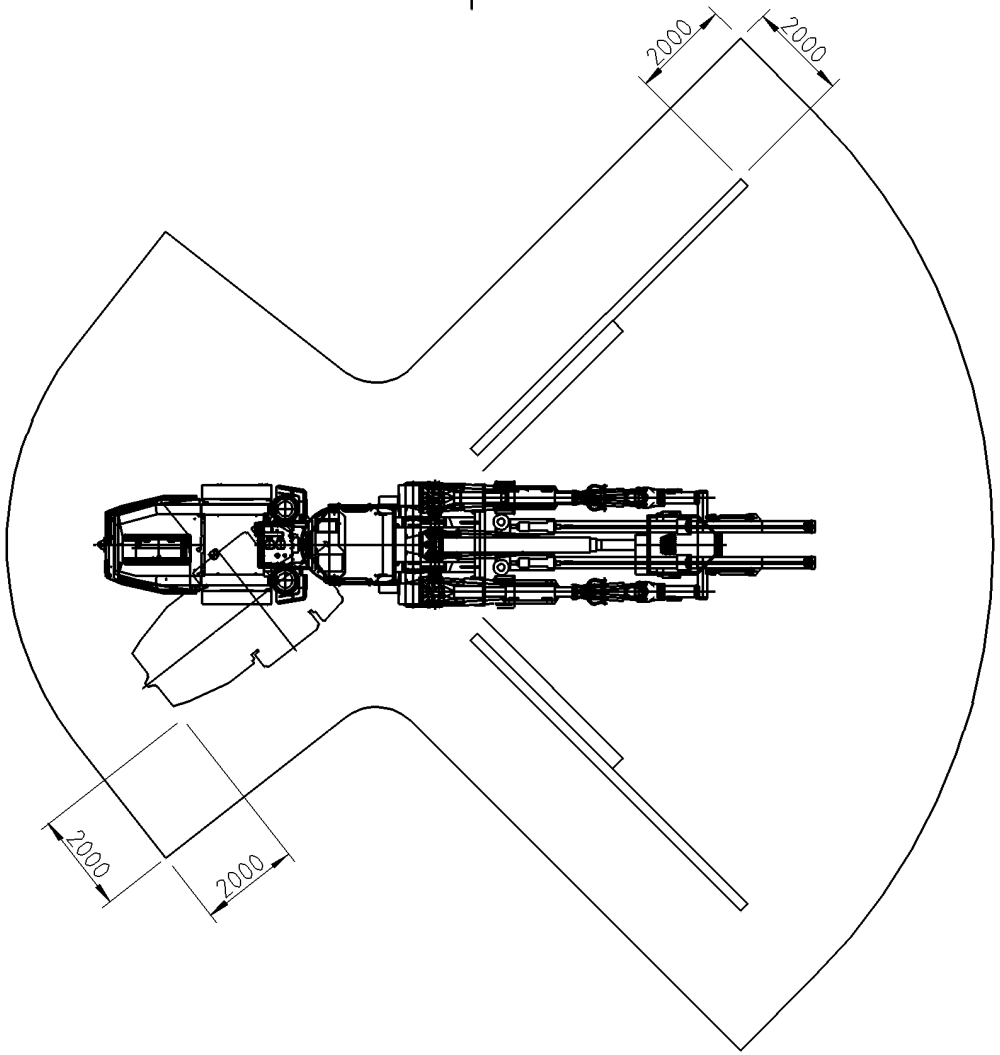

Tolerances. If not indicated.	Machined surfaces	-	-	-	-
according to AC-STD:	1350 K / -	-	-	-	-

Name	Risk area	Rocket Boomer L2 C		Secrecy class	
Material	Transport			AC-STD 1102 K/	
-				Pro/E	
Atlas Copco	Scale 1:100	Fam	3	Compare -	Drg.owner. TMG
	Drawn AVOAFN	Blank	-	Replaces	
Transferred from	Std.chd.	Blk.wt. kg	Fin.wt. 0.000 kg	Designation	Sheet 1(1)
	Design chd.	Prod.chd.	Appd. P Roth	Date 2003-10-17	9119255021

Rev.	Ver.	Posi-tion	Modified from	Date	Intr.	DM no.
1	0		-	-	-	-

Property of Atlas Copco Rock Drills AB. Any unauthorized use or copying of this document or any part thereof is prohibited.

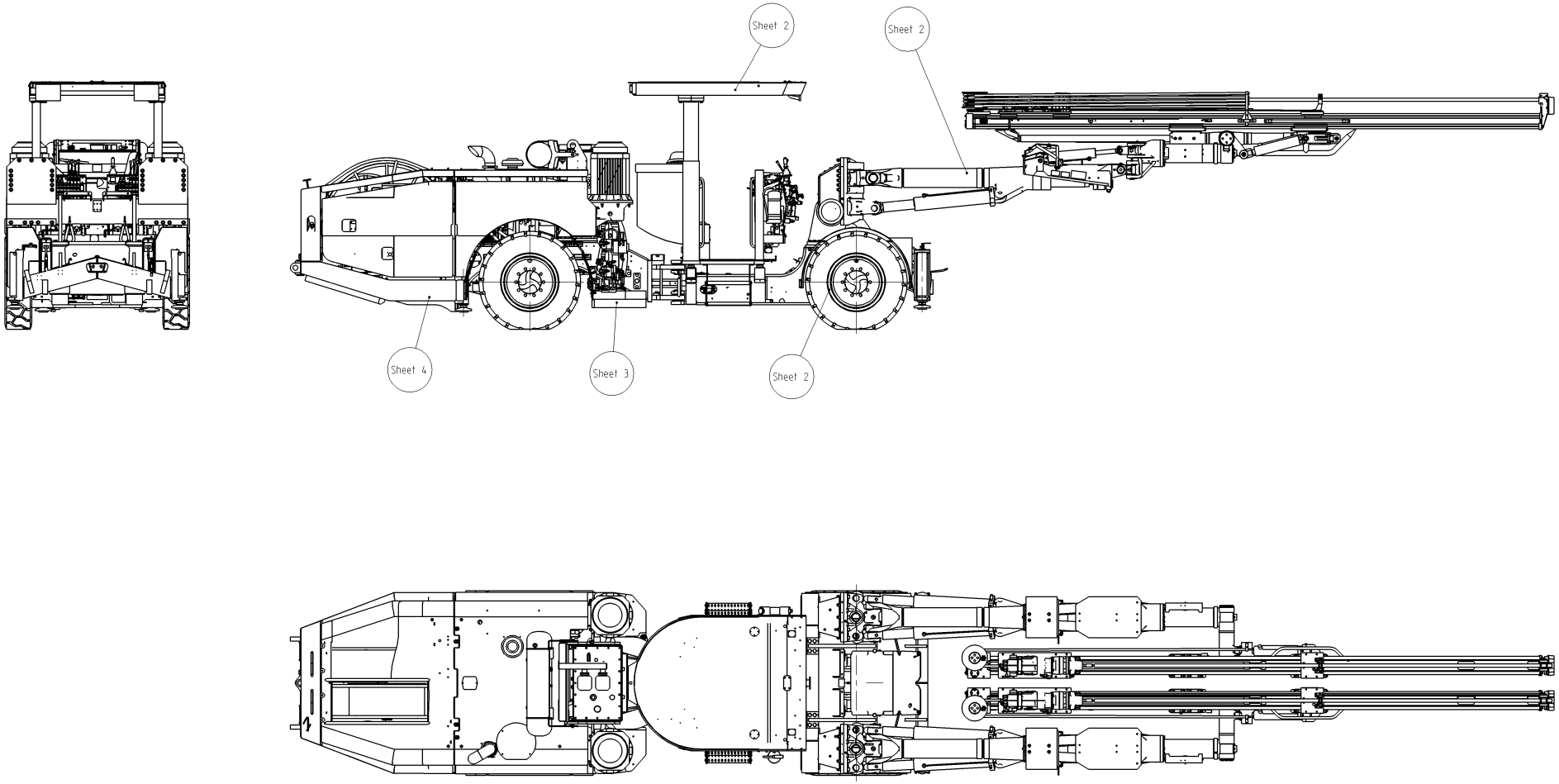

Model name	Rev	Ver
Obj 9119258600	1	0

Rev.	Ver.	Position	Modified from	Date	Intr.	DM no.
1	0	-	-	-	-	-

Pos.	Designation	Number	Name	Material
Tolerances. If not indicated.	Machined surfaces	-	-	-
according to AC-STD:	1350 K - -	-	-	-

Name: Assembly drawing B M2D SP

Material: B M2 SP with DCS-system and Protective roof
2 x BUT 32 + HL SP2/4-cyl. diesel engine STEP3

Secrecy class: AC-STD 1102 K/ Pro/E

Atlas Copco

Scale	Form	Compare	Org.owner.
1:25	-	-	TMG
Drawn: UTUMP/P Roth	Blank: -	Replaces: -	
Std.chd.: -	Blk.wt.: - kg	Fin.wt.: 0 kg	Designation: 9119258600
Design chd.: -	Prod.chd.: -	Appd.: P Roth	Date: 2008-04-02

Transferred from

Sheet 1(4)

Compare with the original structure in DEMO

Property of Atlas Copco Rock Drills AB. Any unauthorized use or copying of this document or any part thereof is prohibited.

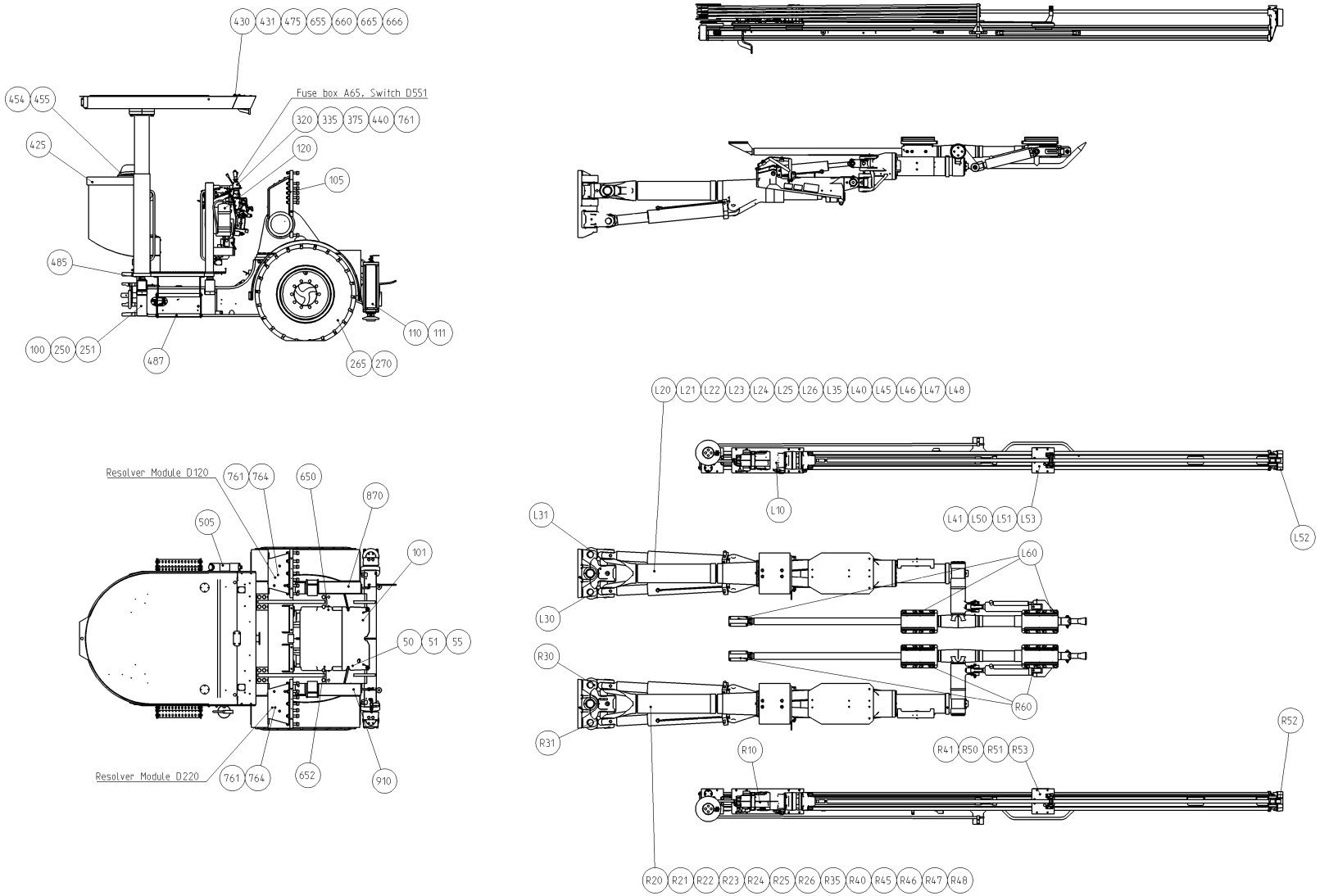

Model name	Rev	Ver
Obj 9119258600	1	0

Rev.	Ver.	Position	Modified from	Date	Intr.	DM no.
1	0	-	-	-	-	-

Pos.	Designation	Number	Name	Material
Tolerances, if not indicated, according to AC-STD:	Machined surfaces 1350 K - -	-	-	-

Name: Assembly drawing B M2D SP

Material: B M2 SP with DCS-system and Protective roof
2 x BUT 32 + HL SP2/4-cyl. diesel engine STEP3

Secrecy class: AC-STD 1902 K/ Pro/E

Scale: 1:25 | Drawn: OTUMP/P Roth | Fam: - | Blank: - | Compare: - | Replaces: - | Org.owner: TMG

Transferred from | Std.chd.: - | Blk.wt.: - kg | Fin.wt.: kg | Designation: 9119258600 | Sheet: 2(4)

Design chd.: - | Prod.chd.: - | Appd.: P Roth | Date: 2008-04-02

Compare with the original structure in DEMO

Property of Atlas Copco Rock Drills AB. Any unauthorized use or copying of this document or any part thereof is prohibited.

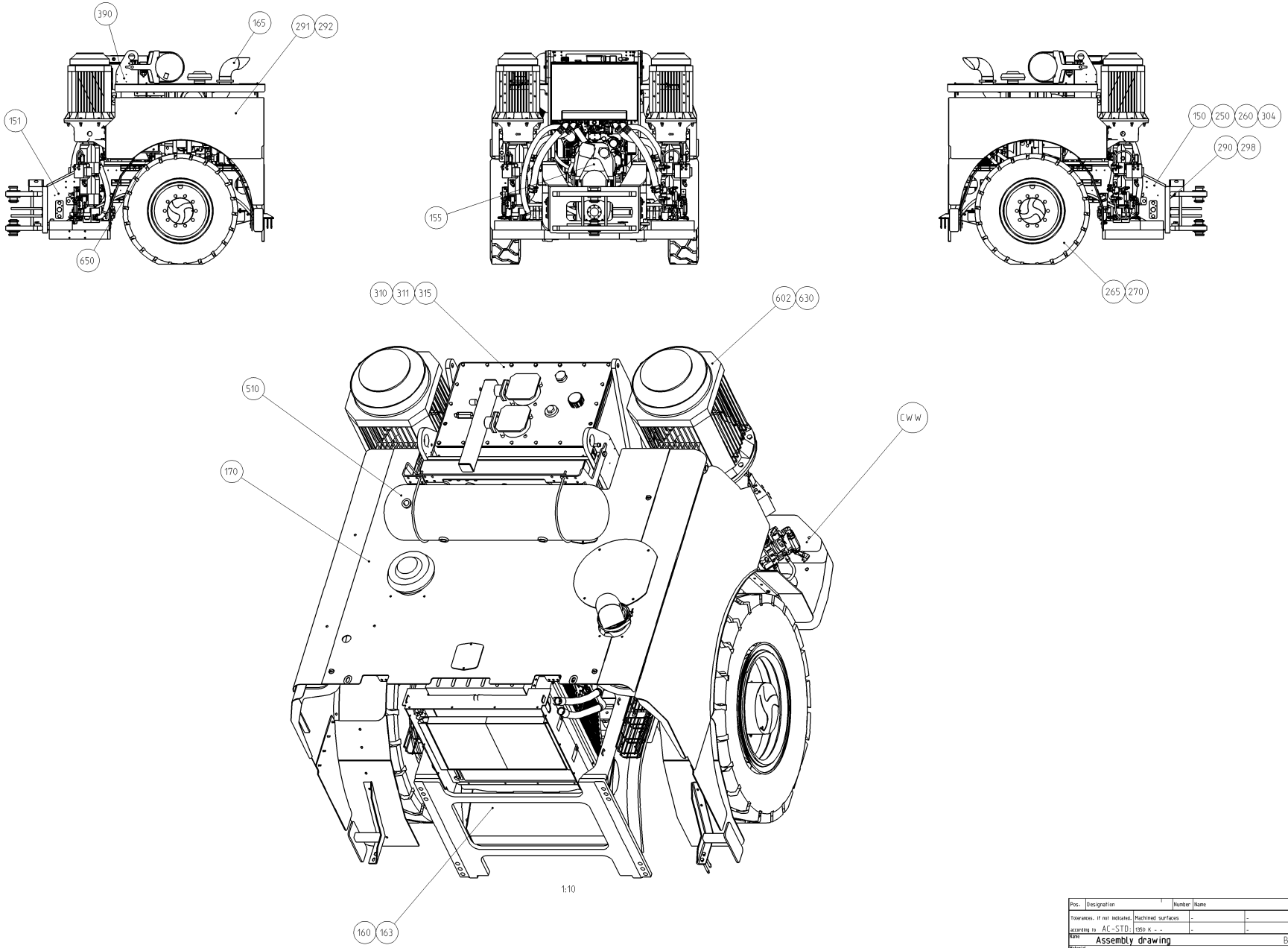

Model name	Rev	Ver
Obj 9119258600	1	0

Rev.	Ver.	Position	Modified from	Date	Intr.	DM no.
1	0	-	-	-	-	-

Pos.	Designation	Number	Name	Material
Tolerances. If not indicated.	Machined surfaces	-	-	-
according to AC-STD:	1350 K - -	-	-	-

Name: Assembly drawing B M2D SP

Material: B M2 SP with DCS-system and Protective roof
2 x BUT 32 + HL SP2/4-cyl. diesel engine STEP3

Secrecy class: AC-STD 1902 K/ Pro/E

Atlas Copco

Scale	Drawn	Std.chd.	Blk.wt.	Fam.	Blank	Fin.wt.	Compare	Replaces	Designation	Sheet
1:20	OTUMP/P Roth	-	-	-	-	0 kg	-	-	9119258600	3(4)

Org.owner: TMG

Transferred from

Design chd.	Prod.chd.	Appd.	Date
-	-	P Roth	2008-04-02

Compare with the original structure in DEMO

Property of Atlas Copco Rock Drills AB. Any unauthorized use or copying of this document or any part thereof is prohibited.

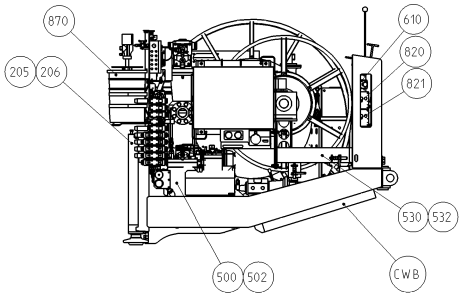

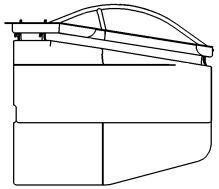

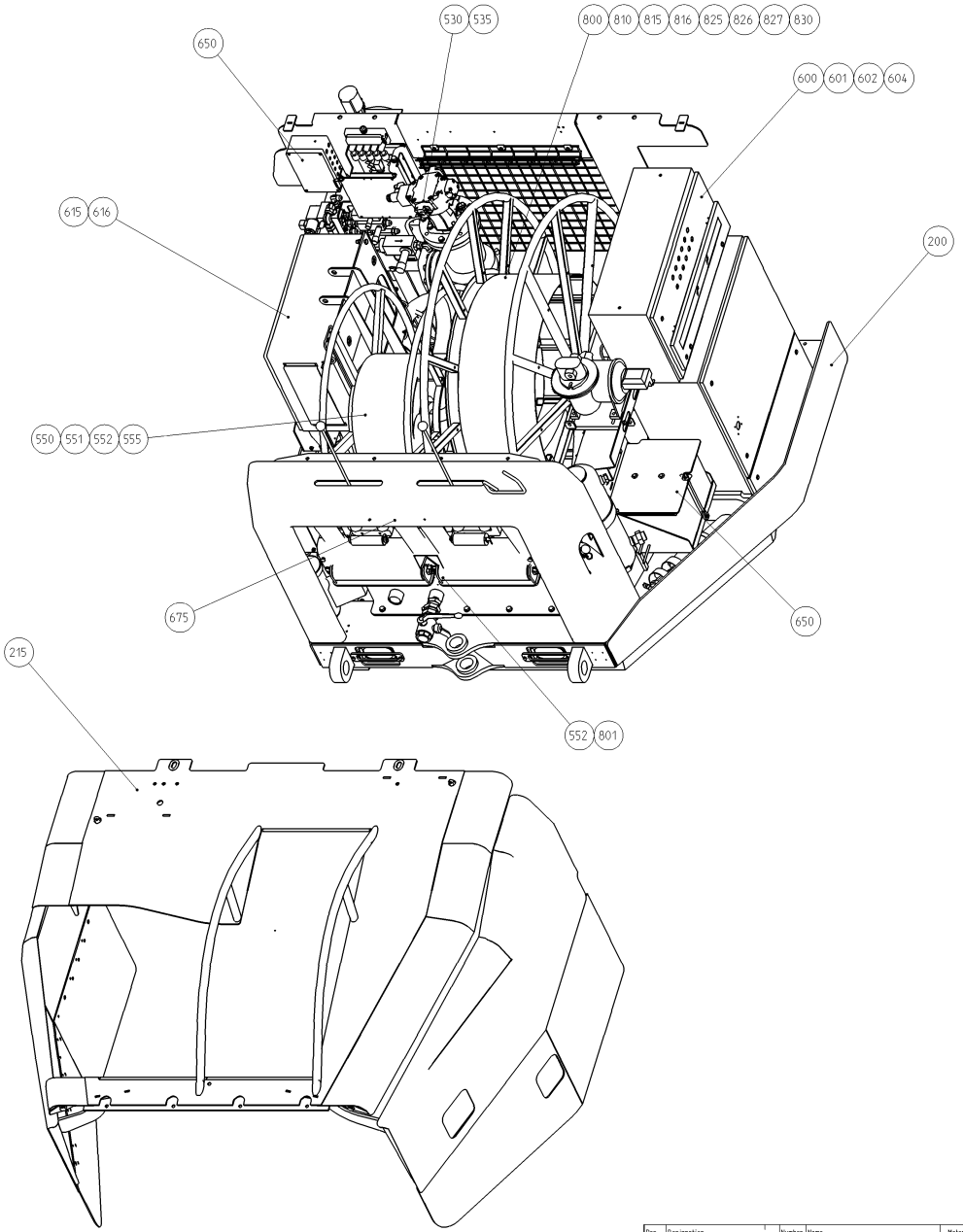

1:10

Rev.	Ver.	Position	Modified from	Date	Intr.	DM no.
1	0	-	-	-	-	-

Pos.	Designation	Number	Name	Material
Tolerances, if not indicated, according to AC-STD:	Machined surfaces 1350 K - -	-	-	-

Name: Assembly drawing B M2D SP

Material: B M2 SP with DCS-system and Protective roof
2 x BUT 32 + HL SP2/4-cyl. diesel engine STEP3

Secrecy class: AC-STD 1902 K/ Pro/E

Atlas Copco

Scale: 1:20 | Drawn: OTUMP/P Roth | Form: - | Blank: - | Compare: - | Replaces: - | Org.owner: TMG

Std.chd.: - | Blk.wt.: - kg | Fin.wt.: 0 kg

Transferred from: | Design chd.: - | Prod.chd.: - | Appd.: P Roth | Date: 2008-04-02

Designation: 9119258600 | Sheet: 4(4)

Compare with the original structure in DEMO

Property of Atlas Copco Rock Drills AB. Any unauthorized use or copying of this document or any part thereof is prohibited.

Model name: 9119258600 | Rev: 1 | Ver: 0

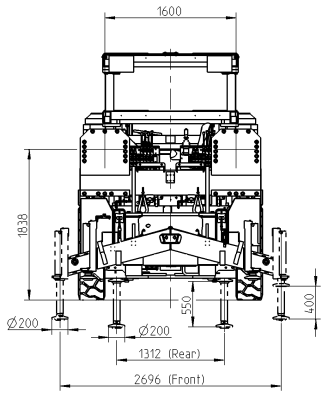

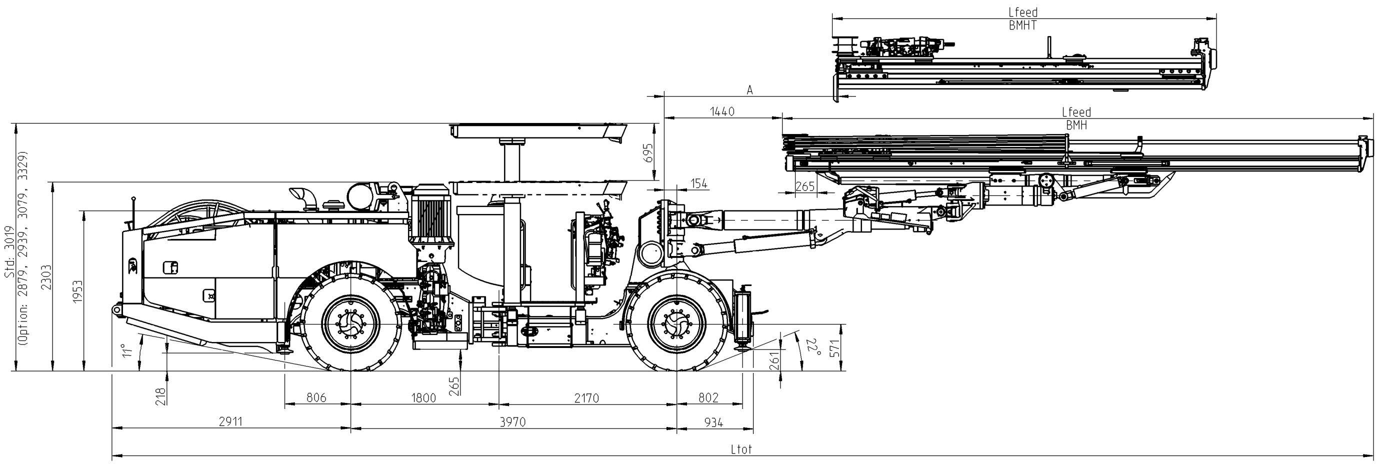

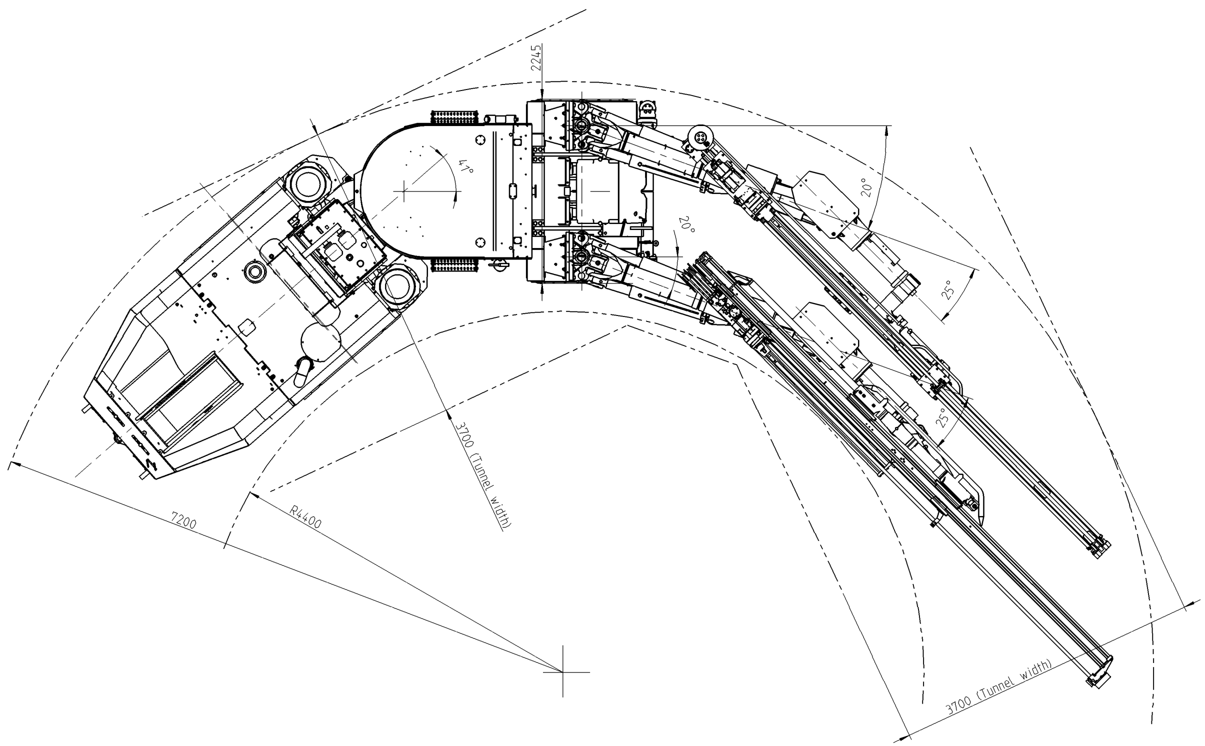

Feed	Ltot	Lfeed (Max/Min)	A	Max Feed ext.
BMH 6812	13449	5287		1800
BMH 6814	14044	5882		1800
BMH 6816	14654	6492		1800
BMH 6818	15264	7102		1800
BMHT 6814/08	13033	5903/4088	2731	1627
BMHT 6816/10	13450	6503/4678	2120	1800
BMHT 6818/10	13450	7123/4678	2120	1800

For rigs equipped with BSH110 dimensions Ltot and Lfeed is increased by 84 mm.
For rigs with Australian centralizers (AC) dimensions Ltot and Lfeed is increased by 80 mm.

Rev.	Ver.	Position	Modified from	Date	Intr.	DM no.
3	1	-	Dimensions for BMHT 681X/10 changed	2008-04-14	PR	TMG084743

Name: **Dimension drawing** B M2 SP

Material: Boomer M2 SP with DCS and Protective roof
2 x BUT 35 SL/4-cyl. diesel engine STEP3

Tolerances, if not indicated, according to AC-STD: 1350 K - -
Secrecy class: AC-STD 1102 K/ — Pro/E

Scale: 33:1000 | Drawn: UTUMP/P Roth | Appd.: P Roth | Date: 2007-07-13 | Drg.owner: TMG

Designation: 9119258601 — Sheet 1(1)

Property of Atlas Copco Rock Drills AB. Any unauthorized use or copying of this document or any part thereof is prohibited.

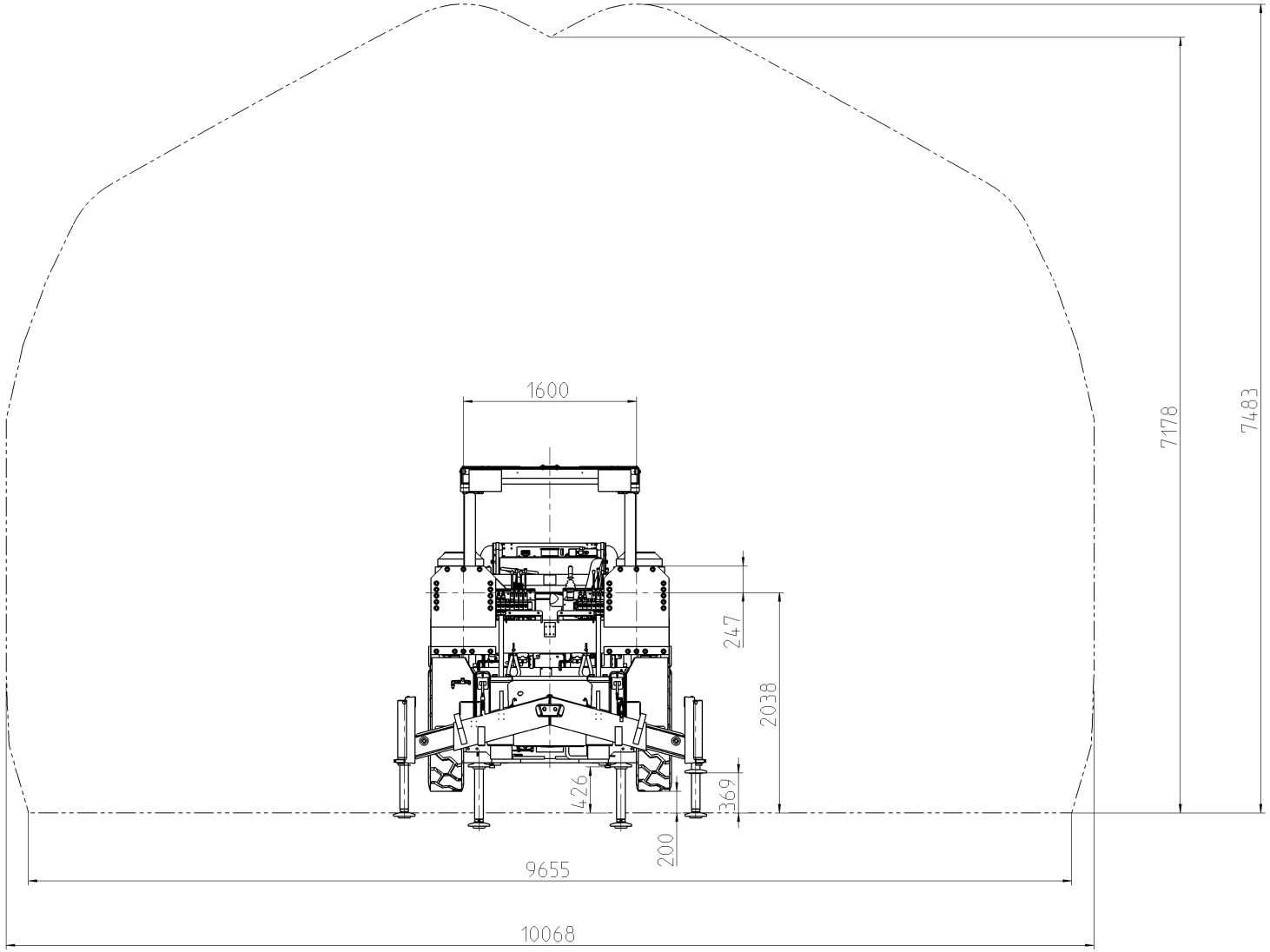

Coverage Area Face drilling with parallel holes: 65 m²

Pos.	Designation	Number	Name	Material
Tolerances, if not indicated, according to AC-STD:	Machined surfaces 1350 K - -	-	-	-

Name: Coverage area

Material: Boomer M2 SP

2 X BUT 35 SL ver G. c/c booms: 1600 mm

Secrecy class: AC-STD 1902 K/ Pro/E

Atlas Copco

Scale	Form	Compare	Org.owner
1:20	-	-	TMG
Drawn: OTUMP/P Roth	Blank: -	Replaces: -	
Std.chd.: -	Blk.wt.: - kg	Fin.wt.: kg	Designation: 9119258602
Design chd.: -	Prod.chd.: -	Appd.: P Roth	Date: 2008-02-18

Transferred from

Sheet 1(1)

Rev.	Ver.	Position	Modified from	Date	Intr.	DM no.
1	0	-	-	-	-	-

Model name: 9119258602 Rev: 1 Ver: 0

Compare with the original structure in DEMO

Property of Atlas Copco Rock Drills AB. Any unauthorized use or copying of this document or any part thereof is prohibited.

For designers use only !	
19.00	Vikt framaxel
8.00	Vikt bakaxel
5300	Stropphöjd mark-ok
3970	Hjulbas rigg
571	Hjulaxelhöjd
4740	Avstånd till lyftöron fram från bakre hjulaxel i längd
525	Avstånd till lyftöron bak från bakre hjulaxel i längd
259	Avstånd till lyftöron fram från bakre hjulaxel i höjd
1662	Avstånd till lyftöron bak från bakre hjulaxel i höjd
900	Avstånd mellan lyftöron fram c/c
970	Avstånd mellan lyftöron bak c/c

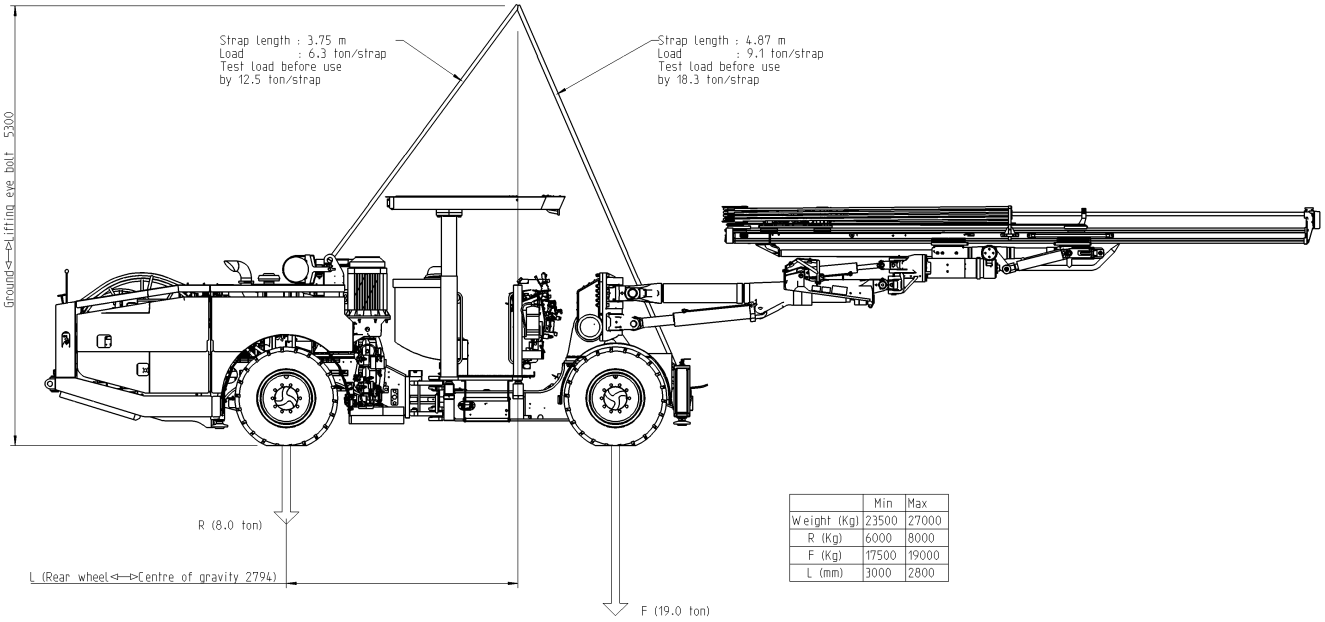

	Min	Max
Weight (Kg)	23500	27000
R (Kg)	6000	8000
F (Kg)	17500	19000
L (mm)	3000	2800

Be very careful when strapping and lifting the rig ! Lift must be done through the centre of gravity so the rig is balanced during lifting.

Strapping and lifting must be done under following conditions.

- ◎ Rock drill and feed placed in rear position and the feed adjusted parallel to boom.
- ◎ Attach straps to the lifting eyes acc. to the drawing. Check that the lift is done through the centre of gravity!
- ◎ When lifting the unit and transporting it on another vehicle the articulated joint must be locked with the lock bar and lock pins supplied with the unit.
- ◎ Lift carefully! Make sure that the unit is stable and that the straps do not slip!

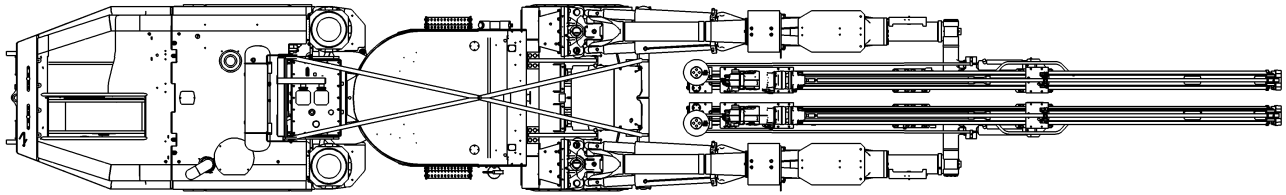

Compare with the original structure in DEMO

Pos.	Designation	Number	Name	Material
Tolerances. If not indicated. according to AC-STD:	Machined surfaces 1350 K / -	-	-	-

Name: Strapping description B M2D SP
Material: Drill rig
Protective roof or Cabin
Secrecy class: AC-STD 1902 K/
Pro/E
Scale: 1:30
Drawn: OTUMP/P Roth
Sheet: 1(2)
Designation: 9119258603
Date: 2008-04-03
Appd.: P Roth
Transferred from
Drg.owner: TMG

Rev.	Ver.	Position	Modified from	Date	Intr.	DM no.
1	0		-	-	-	-

Model name: Obj 9119258603 Rev 1 Ver 0

Property of Atlas Copco Rock Drills AB. Any unauthorized use or copying of this document or any part thereof is prohibited.

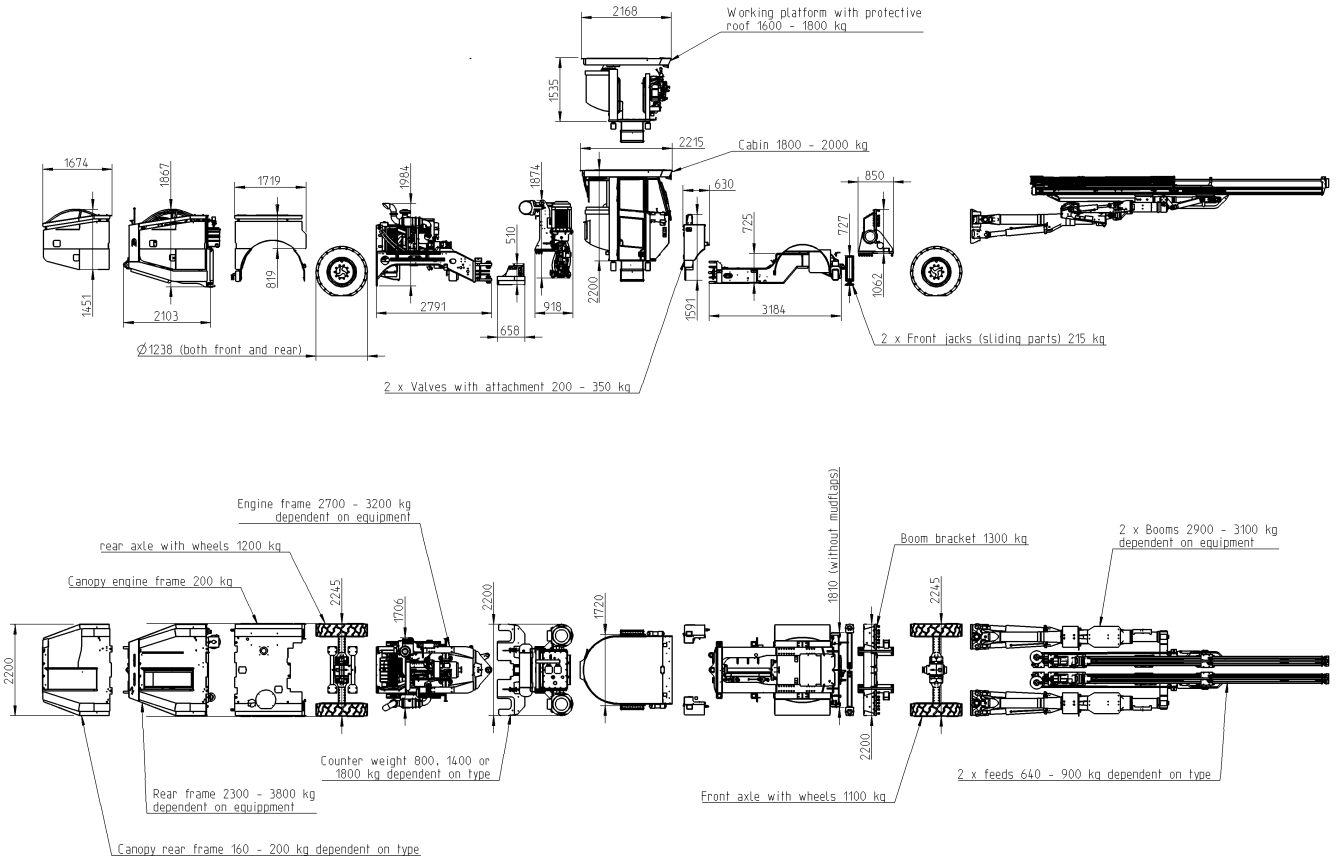

Boomer M2D SP in pieces.
Note that the weight are approximate
and is dependent on optional equipments.

Pos.	Designation	Number	Name	Material
Tolerances, if not indicated, according to AC-STD:	Machined surfaces 1350 K / -	-	-	-
		-	-	-
		-	-	-

Name: Strapping description B M2D SP — Secrecy class: AC-STD 1902 K/
Material: Drill rig — Pro/E
Protective roof or Cabin
Atlas Copco — Scale 1:60 — Plan 1 — Compare - — Org.owner.
Drawn: UTUMP/P Roth — Blank — Replaces — TMG
Std.chd. — Blk.wt. kg — Fin.wt. kg — Designation — Sheet 2(2)
Transferred from — Design chd. — Prod.chd. — Appd. P Roth — Date 2008-04-03
9119258603

Rev.	Ver.	Posi-tion	Modified from	Date	Intr.	DM no.
1	0		-	-	-	-

Compare with the original structure in DENO

Property of Atlas Copco Rock Drills AB. Any unauthorized use or copying of this document or any part thereof is prohibited.

Rev. | Ver.
1 | 0
Mesh name
Obj 9119258603

Water diagram
LIST OF CONTENTS

Art.no.	Description	Remarks	Page
9106077931	WATER SCHEMATIC	BALL VALVE IN DRILL PANEL	92
9106078068	WATER SCHEMATIC	L/M2D	93
9106157031	WATER SCHEMATIC	THERMOSTAT	94

Note	Modified from	Date	Intr.	Note	Modified from	Date	Intr.
1	HOSE MARK WF ADDED AND CHANGED	980911	SK	.	.	.	.

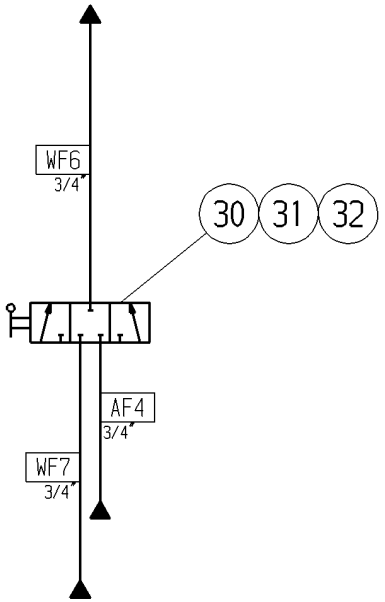

Pos.	Designation	Number	Name	Material

Tolerances, if not indicated, according to:	Machined surfaces	.	.	.
ATLAS COPCO STANDARD / Class	1350 K / .	.	.	.

Name	WATER SCHEDULE	BVX-DCS	Secrecy class
Material	CONTROL PANEL		1102 K/ .
	DCS-1800		CAD

Scale	.	Fam	.	4	Compare	.	Drg.owner.
Drawn	UTU13/BF	Blank	.	.	Replaces	.	TMG
Transferred from		Blk.wt.	. kg	Fin.wt.	kg	Designation	Sheet 1 (1)
.			Appd. BF	Date	98-08-27	9106 0779 31	

This document is our property and shall not without our permission be altered, copied, used for manufacturing or communicated to any other person or company.

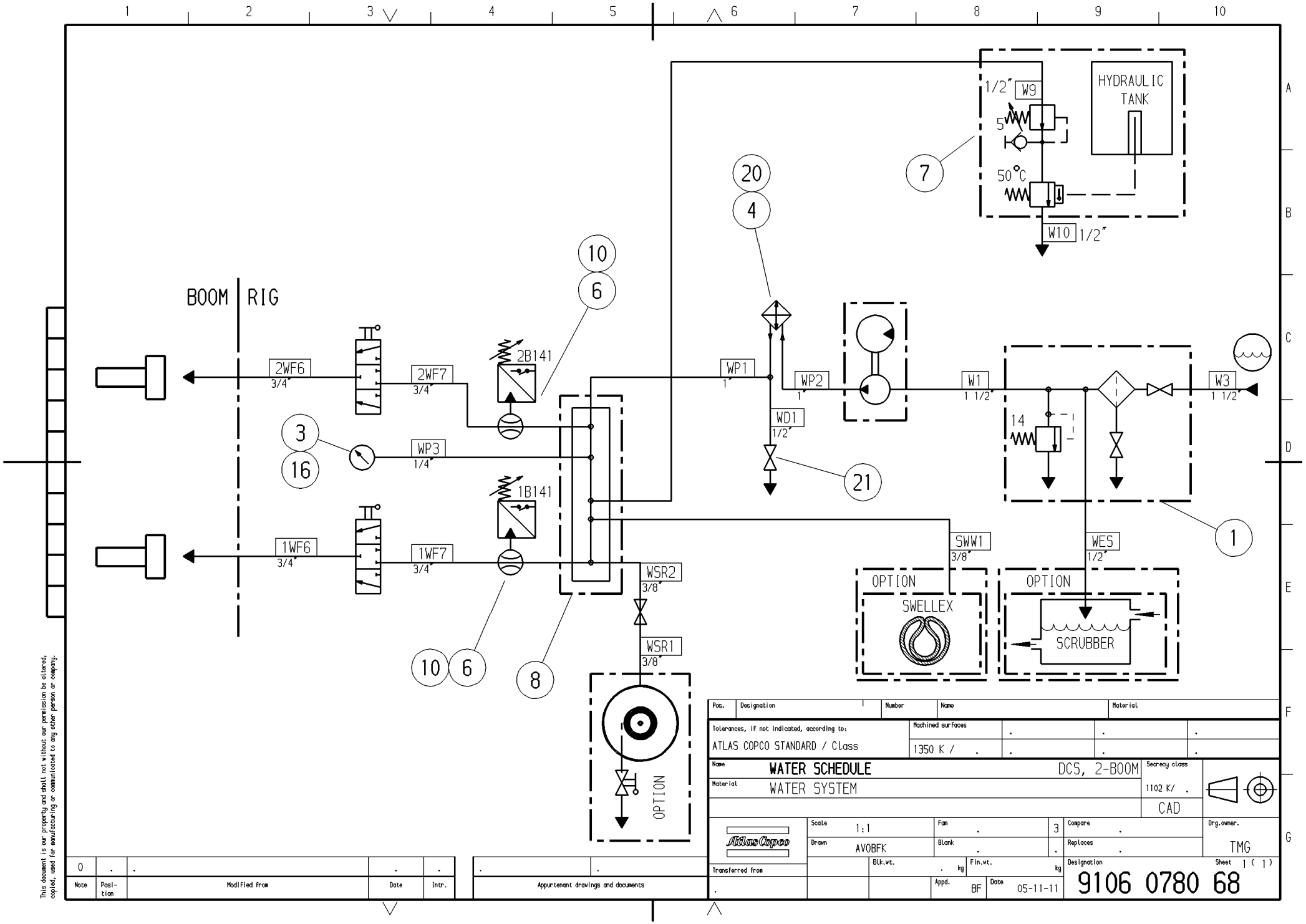

Pos.	Designation	Number	Name	Material

Tolerances, IF not indicated, according to:	Machined surfaces			
ATLAS COPCO STANDARD / Class	1350 K / .	.	.	.

Name	WATER SCHEDULE	DCS, 2-BOOM	Secrecy class
Material	WATER SYSTEM		1102 K/ .
			CAD

Scale	1:1	Fam	.	3	Compare	.	Drg.owner.
Drawn	AVOBFK	Blank	.	.	Replaces	.	TMG
Transferred from		Blk.wt.	. kg	Fin.wt.	kg	Designation	Sheet 1 (1)
.			Appd. BF	Date 05-11-11		9106 0780 68	

Note	Posi-tion	Modified from	Date	Intr.
0	.	.	.	.

Appurtenant drawings and documents	
.	.

This document is our property and shall not without our permission be altered, copied, used for manufacturing or communicated to any other person or company.

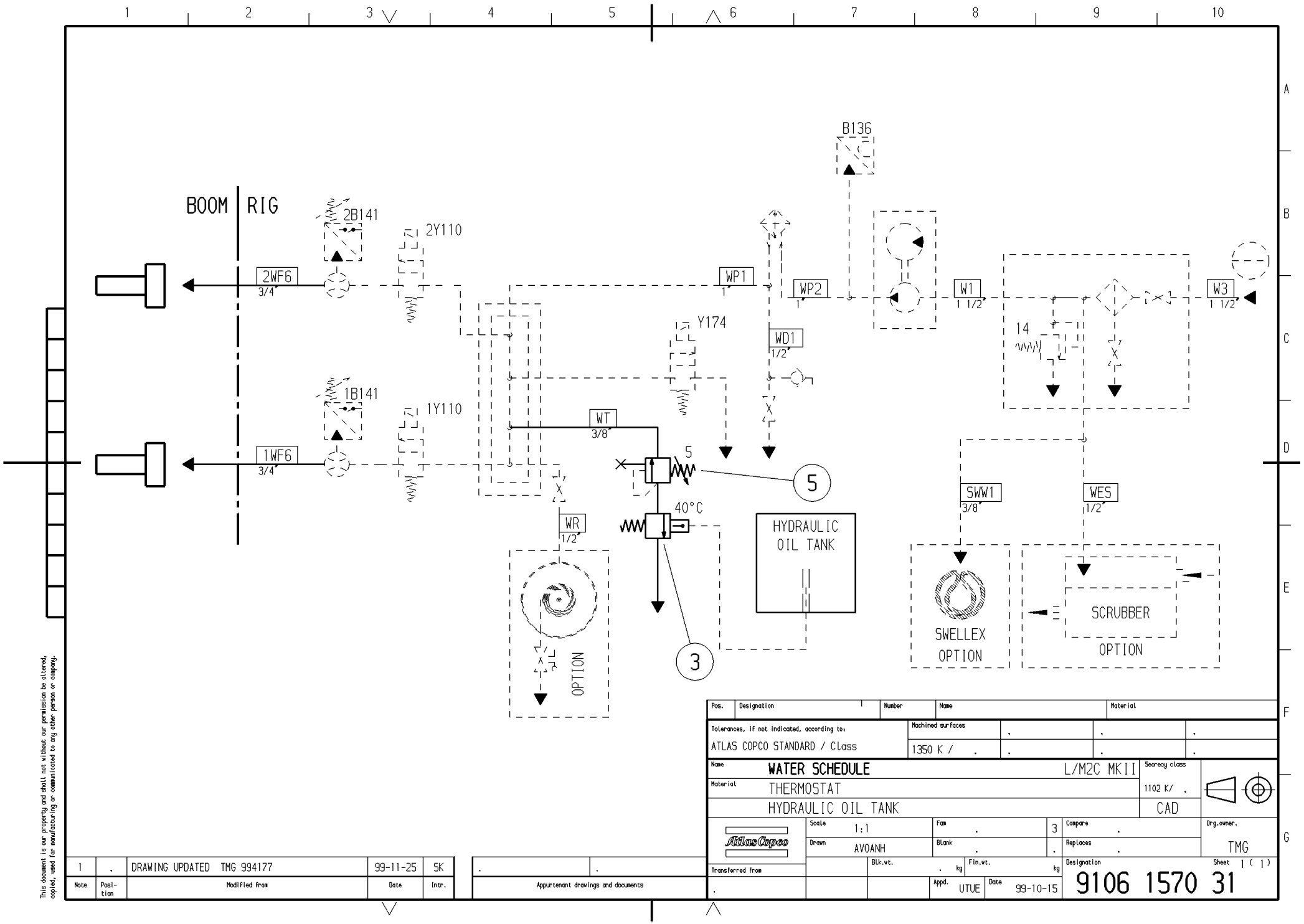

Pos.	Designation	Number	Name	Material

Tolerances, IF not indicated, according to:	Machined surfaces			
ATLAS COPCO STANDARD / Class	1350 K / .	.	.	.

Name	WATER SCHEDULE	L/M2C MKII	Secrecy class
Material	THERMOSTAT		1102 K/ .
	HYDRAULIC OIL TANK		CAD

Scale	1:1	Fam	.	3	Compare	.	Drg.owner.
Drawn	AVOANH	Blank	.	.	Replaces	.	TMG
Transferred from		Blk.wt.	. kg	Fin.wt.	kg	Designation	Sheet 1 (1)
.			Appd. UTUE	Date 99-10-15		9106 1570 31	

Note	Posi-tion	Modified from	Date	Intr.
1	.	DRAWING UPDATED TMG 994177	99-11-25	SK

.	.
Appurtenant drawings and documents	

This document is our property and shall not without our permission be altered, copied, used for manufacturing or communicated to any other person or company.